Ag84Ah
Cop. 3

WOOD-FRAME HOUSE CONSTRUCTION

LIBRARY
MAY 1 2 1965
U.S. DEPARTMENT OF AGRICULTURE

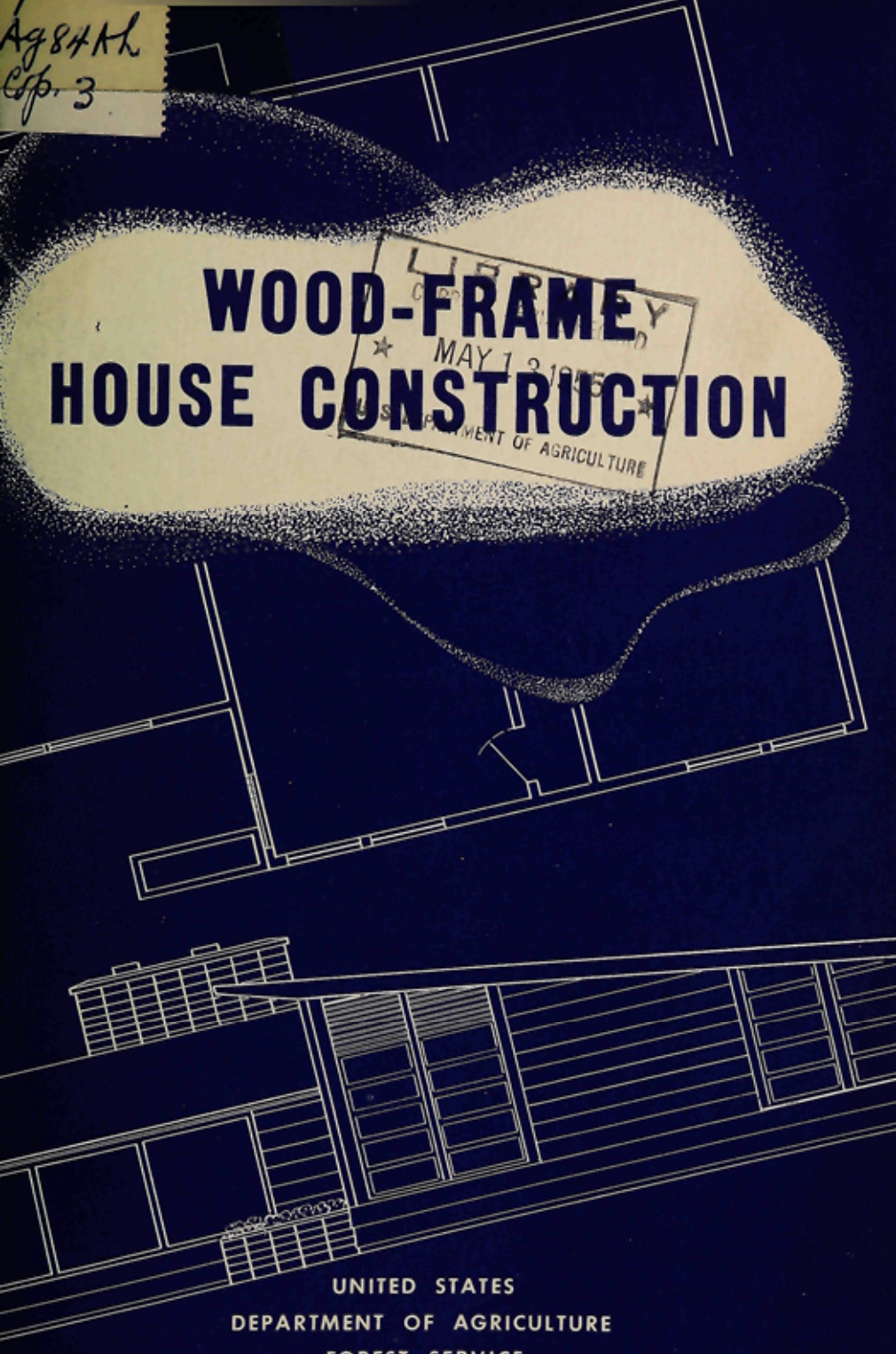

UNITED STATES
DEPARTMENT OF AGRICULTURE
FOREST SERVICE

AGRICULTURE HANDBOOK NO. 73

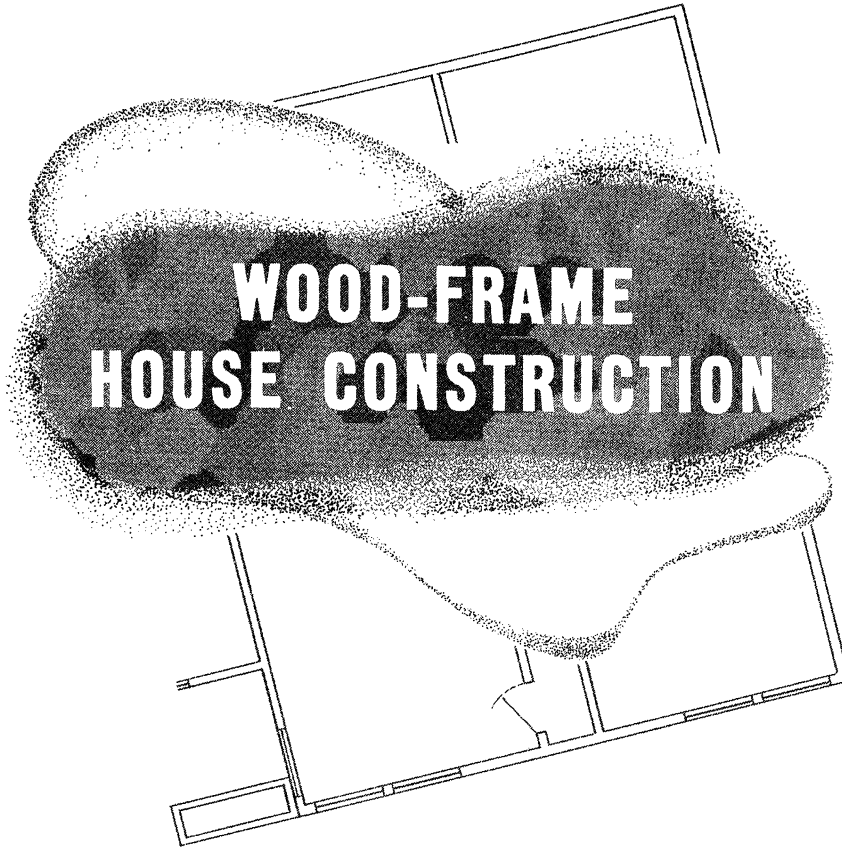

WOOD-FRAME HOUSE CONSTRUCTION

By L. O. ANDERSON and O. C. HEYER, *engineers*

Forest Products Laboratory • Forest Service

Agriculture Handbook No. 73, February 1955

U. S. DEPARTMENT OF AGRICULTURE • WASHINGTON, D. C.

For sale by the Superintendent of Documents, U. S. Government Printing Office
Washington 25, D. C. - Price 65 cents (Paper cover)

ACKNOWLEDGMENT

THIS publication was prepared by the Forest Products Laboratory as a project under the housing research program of the Office of the Administrator, Housing and Home Finance Agency, authorized by Title III of the Housing Act of 1948, as amended, through agreement with the Forest Products Laboratory, Forest Service. Special acknowledgment is made to W. A. Russell, structural engineer, technical staff, Housing and Home Finance Agency.

The preparation of this manual was under the direct supervision of L. V. Teesdale and the overall supervision of R. F. Luxford of the Laboratory staff. Other staff members who contributed materially were M. E. Dunlap, who made valuable review suggestions; F. L. Browne, author of the section on paints; the late Arthur Van Kleeck, author of the section on fire preventive measures; and C. S. Moses, author of the section on decay and termites.

CONTENTS

	Page
Introduction	1
Location and excavation	1
Condition at site	1
Placement of the house	2
Height of foundation walls	3
Excavation	4
Concrete work	5
Footings	6
Draintile	8
Foundation walls and piers	9
Poured concrete walls	9
Concrete-block walls	10
Masonry piers	12
Sill anchors	12
Reinforcing and wall ties	13
Brick or stone veneer	14
Notch for wood beams	15
Termite protection	15
Concrete floor slabs on ground	16
Basic requirements	16
Combined slab and foundation	17
Independent concrete slab and foundation walls	18
Vapor barrier under concrete slab on ground	20
Insulation requirements for concrete floor slabs on ground	20
Insulation types	21
Radiant-heating installation	22
Termite protection	22
Finish floors over concrete slabs on the ground	22
Floor framing	22
Wood joists and subflooring	22
Posts and girders	23
Girder-joist installation	25
Types of wood sill construction	26
Floor joists	27
Bridging	28
Subfloor	28
Floor framing at bay-window projections	31
Wall framing	31
Platform construction	32
Balloon construction	33
Window and door headers	35
Exterior corner and wall-intersection details	36
End-wall framing	37
Lath nailers	38
Ceiling and roof framing	40
Flat roofs	40
Pitched roofs	41
Valleys	42
Dormers	45
Overhangs	45
Lightweight roof trusses	47
Wall sheathing	47
Types of sheathing	48
Corner bracing	49
Installation of sheathing	49
Roof sheathing	53
Installation of roof sheathing	53
Plywood roof sheathing	53
Wood board roof sheathing details at ends of roof	55
Wood board roof sheathing details at chimney openings	55
Wood board sheathing at valleys	56
Exterior trim and millwork	56
Cornice construction	58
Rake and gable-end finish	60
Roof coverings	62
Asphalt shingles	62
Wood shingles	65
Built-up roofs	66
Finish at ridge	68
Exterior frames, windows, and doors	68
Double-hung windows (check-rail windows)	68
Casement sash (outswinging type)	71
Stationary windows	71
Projected windows	73
Metal sash	75
Exterior doors and frames	77
Types of exterior doors	77
Exterior siding and stucco	79
Wood siding	79
Installation of siding	82
Wood shingles	86
Asbestos-cement siding and shingles	87
Stucco side-wall finish	87
Stucco plaster	88
Masonry veneer	88
Framing details for plumbing	88
Stack-vent walls	88
Bathtub supports	89
Cutting of framing	90
Framing details for heating systems	92
Warm-air systems	93
Hot-water or steam systems	95
Radiant-heating systems	96
Wiring	97
Wiring systems	99
Box location	99
Switches	99
Outlets	99
Box installation	100
Insulation	100
Flexible insulation	101

	Page
Insulation—Continued	
Fill insulation	101
Reflective insulation	101
Rigid insulation	101
Miscellaneous insulating materials	104
Where to insulate	105
Installation of insulation	106
Precautions in insulating	106
Vapor barriers	109
Ventilation	110
Area of ventilators	111
Gable roofs	111
Hip roofs	111
Flat roofs	111
Types and location of outlet ventilators	115
Types and location of inlet ventilators	115
Crawl-space ventilation and soil cover	117
Interior-wall and ceiling finish	117
Plaster finish	118
Dry-wall finish	123
Floor coverings	128
Wood-strip flooring	128
Wood-tile flooring	131
Base for linoleum, asphalt-tile, or rubber-tile floors	132
Linoleum	132
Asphalt-tile flooring	133
Ceramic tile	133
Rubber tile	134
Interior doors, frames, and trim	135
Trim parts for doors and frames	135
Installation of door hardware	141
Window-trim installation	142
Base and ceiling moldings	144
Millwork	145
Kitchen cabinets	145
Closets	146
Cabinets	148
Fireplace millwork	149
Stairs	149
Terms	149
Ratio of riser to tread	154
Design of stairway	154
Framing of stair well	155
Stringers or carriages	155
Newels and hand rails	157
Basement stairs	157
Disappearing stairs	157
Exterior stairs	157
Sheet-metal work	158
Flashing	158
Gutters and downspouts	162
Porches and garages	164
Porches	164
Garages	167
Chimneys and fireplaces	171
Chimneys	171
Fireplaces	174
Flue lining	175
Wood framing	177
Drives, walks, and basement floors	177
Driveways	177
Sidewalks	179
Basement floors	179
Painting and finishing	180
Characteristics of woods for painting	181
House paints for exterior wood	187
Natural finishes for exterior wood	190
Interior walls and ceilings	191
Floors	193
Plywood and wallboards	194
Protection against decay and termites	194
Decay	196
Subterranean termites	197
Dry-wood termites	197
Safeguards against decay	198
Safeguards against termites	200
Maintenance inspections	201
Protection against fire	202
Elements of fire hazard	202
Construction	203
Control of fire hazard	204
Methods of reducing building costs	204
Design	205
Choice of materials	205
Construction	206
Protection and care of material on the building site	207
Protection of framing materials	207
Window and door frames	207
Siding and lath	207
Plastering in cold weather	208
Interior finish	208
Maintenance and repair	209
Basement	209
Crawl-space area	210
Roof and attic	211
Exterior walls	212
Interior	212
Literature cited	214
Glossary of housing terms	217
Index	227

WOOD-FRAME HOUSE CONSTRUCTION

By L. O. Anderson and O. C. Heyer, *engineers,*
Forest Products Laboratory [1]

INTRODUCTION

The purpose of this publication is to present sound principles for wood-frame house construction and suggestions for selecting suitable materials in a manner that will greatly assist in the construction of a good house even by those without previous construction experience.

The three primary essentials for the building of a satisfactory house are (1) an efficient plan, (2) suitable materials, and (3) sound construction. The house may be large or small, elaborate or unpretentious, modern or traditional, yet without all three of these essentials it may be neither permanent nor satisfactory. While designing and planning are beyond the scope of this publication, the information on materials and building practices is intended to guide builders and prospective homeowners in erecting a good house. It can be used as a training aid for apprentices or as a standard by which to judge the quality of the construction of a house.

This publication is devoted exclusively to wood-frame construction, and sets forth what are considered to be acceptable practices in assembling and arranging the parts of a well-designed house. While details of construction may vary in different localities, the fundamental principles are the same. This publication deals essentially with established methods of construction, and it does not attempt to show new types that are constantly appearing in various parts of the country.

Construction details for houses are given in a series of drawings. These drawings, with accompanying text, show the methods used in assembling the various parts. Additional information on painting, fire protection, and decay prevention is given near the end of this Handbook.

All construction requirements as well as species and grades of lumber specified conform as nearly as practicable to Federal Housing Administration minimum property requirements.

LOCATION AND EXCAVATION

Condition at Site

Before excavation is started the builder should determine the subsoil conditions by checking with others who have built in the same area or by test borings. A rock ledge may be encountered, necessitating expensive removal. Where fill of any kind has been used the

[1] Maintained at Madison 5, Wis., in cooperation with the University of Wisconsin.

foundation should extend through the fill to undisturbed soil. Some types of soil may become semiplastic when wet and squeeze out from under the footings, causing irregular settlement of the foundations. The water table or natural ground water line may be close to the surface, particularly in areas near lakes. The water table level may be the factor which determines the depth of a basement or the location of sewer pipes.

Placement of the House

After the site is cleared, the location of the outer walls of the house is marked out. In general, a survey is made of the plot of land and the surveyor will mark the corners of the lot. The corners of the house also should be marked by the surveyor.

Before the exact location of the house is determined, check the local codes for minimum setback and side yard requirements; the location of the house is usually determined by these codes. In some cases the setback may be established by existing houses on adjacent property.

The next step is to establish lines and grades as aids in keeping the work true and level. Figure 1 shows a convenient arrangement of batter boards for lines of the house.

Small stakes are first located accurately at each corner of the house with tacks driven in their tops indicating the outside line of the foundation walls. To assure square corners, measure the diagonals to see

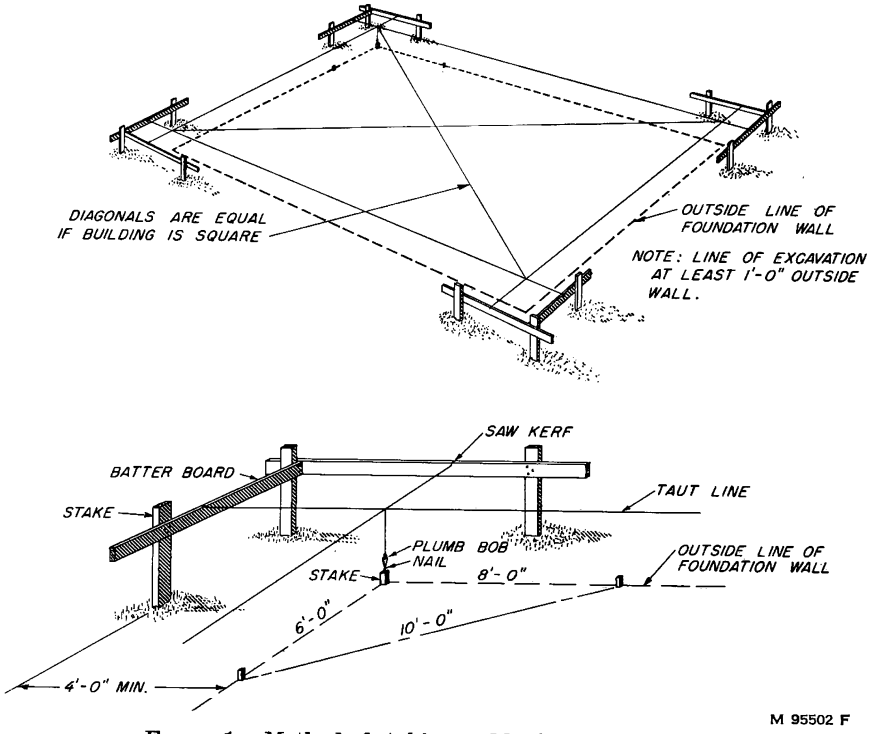

FIGURE 1.—Method of staking and laying out the house.

if they are the same length. The corners can also be squared by measuring along one side a distance in 3-foot units, and along the adjacent end the same number of 4-foot units. The diagonal will measure an equal number of 5-foot units when the unit is square.

After the corners have been located, three 2- by 4-inch stakes of suitable length are driven at each corner 4 feet (minimum) beyond the lines of the foundation; then 1- by 6-inch boards are nailed horizontally so the tops are all level at the same grade. Twine or stout string (called carpenter chalkline) is next held across the top of opposite boards at two corners and adjusted so that it will be exactly over the corner tacks in the corner stakes at either end; a plumb bob is handy for setting the lines. Saw kerfs ¼ inch deep are cut where the lines touch the boards so that they may be replaced if broken or disturbed. After similar cuts are located in all 8 batter boards, the lines of the house will be established. Check the diagonals again to make sure the corners are square.

Height of Foundation Walls

It is common practice to establish the depth of the excavation, and consequently the height of the foundation, by using the highest elevation of the excavation's perimeter as the control point (fig. 2). This method will insure good drainage if sufficient foundation height is allowed for the sloping of the final grade (fig. 3). Foundation walls should be at least 7 feet 2 inches high for full basements.

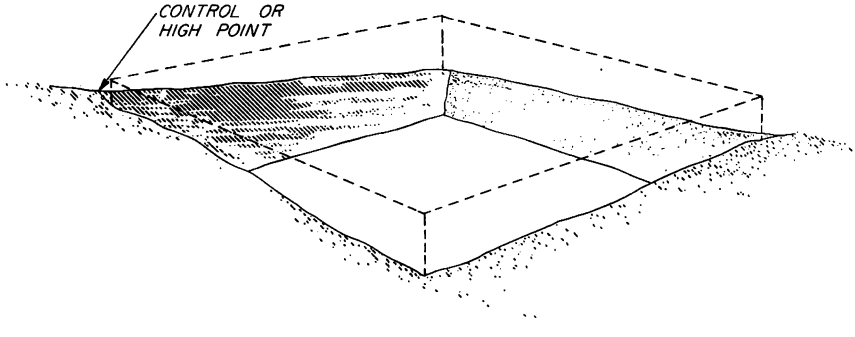

M 87415 F

FIGURE 2.—Method of establishing depth of excavation.

Foundation walls should be extended above the finished grade around the outside of the house so that the wood finish and framing members will be adequately protected from soil moisture. Also so that there will be an opportunity to observe termite tubes between the soil and the wood should they be present, in which case protective measures may be undertaken before damage develops. Enough height should be provided in crawl spaces to permit periodic inspection for termites

For houses with basements, without basements, or with concrete slab floors, the top of the foundation wall should be at least 8 inches above the finish grade at the wall line. The finish grade at the house

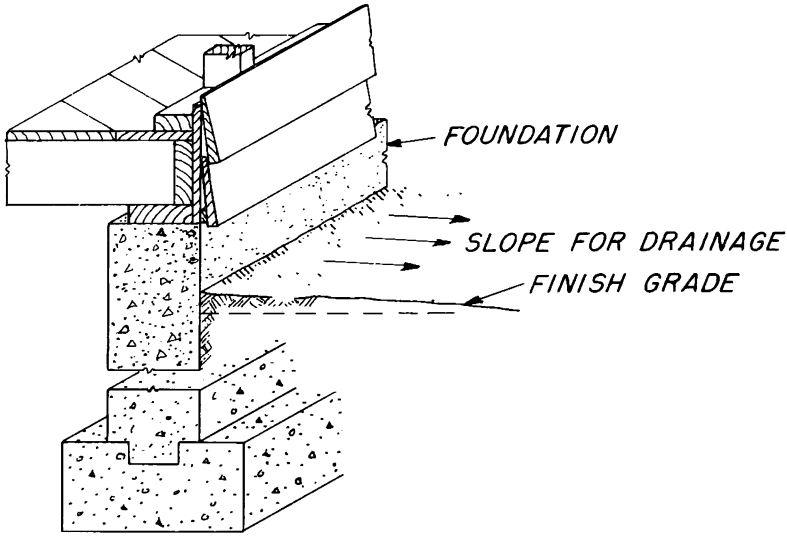

M 87415 F

FIGURE 3.—Finish grade sloped for drainage.

should be 2 to 4 inches above the natural grade at the highest point. For example, a lot may slope upward from front to rear. For good drainage the finish grade is established 4 inches above the natural grade at the rear of the house and the top of the foundation wall would be 8 inches above this established finish grade.

For houses having crawl space the distance between the ground level and under side of the joist should be at least 18 inches above the highest point within the area enclosed by the foundation wall. Where the interior ground level is excavated or otherwise below the outside finish grade, adequate precautionary measures should be made to assure positive drainage at all times.

Where there are habitable rooms in a basement, the finished basement floor level should not be more than 2 feet 6 inches below finish grade and the minimum distance between floor and ceiling should not be less than 7 feet 6 inches. On this basis the top of the foundation wall would be at least 5 feet above the finish grade.

Excavation

The quickest and cheapest way to excavate in most cases is to use power earth removing equipment.

If sod or top soil is to be saved, remove and store it before excavating.

Excavation is preferably carried only to the top of the footings or the bottom of the basement floor, because some soil becomes soft upon exposure to air or water, and it is advisable not to make the final excavation for footings until it is nearly time to pour the concrete.

Excavation must be wide enough to provide space to work when constructing and waterproofing the wall, and laying drain tile (fig.

4). The steepness of the back slope of the excavation is determined by the subsoil encountered. With clay or other stable soil, the back slope can be nearly vertical. When sand is encountered a flatter slope is required to prevent caving.

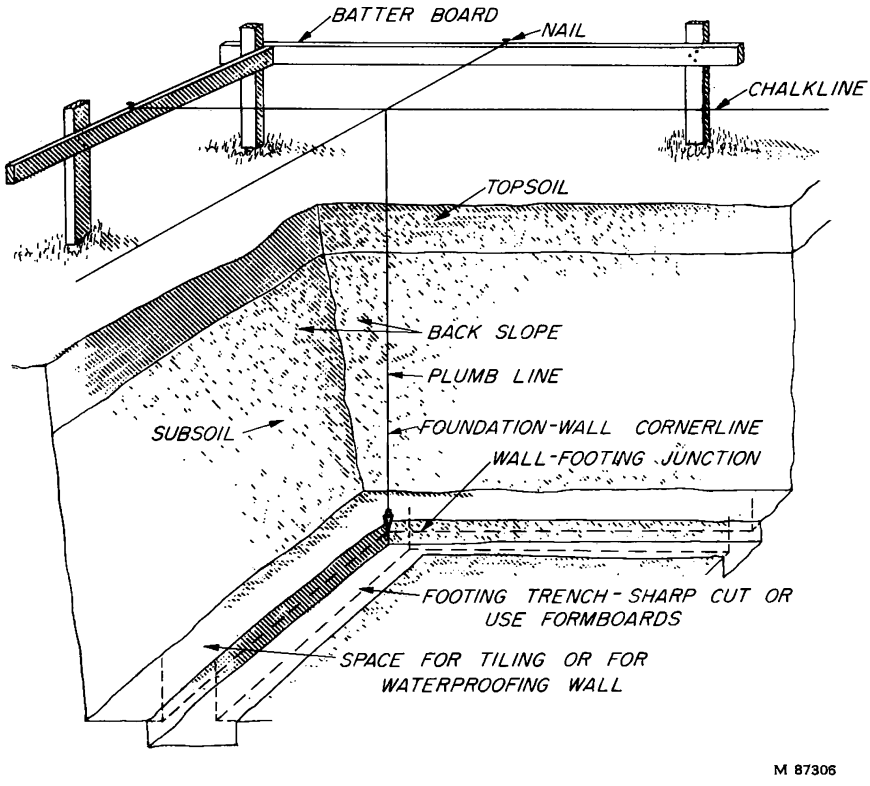

FIGURE 4.—Method of setting batter boards and establishing corners for excavation.

CONCRETE WORK

Concrete, both plain and reinforced, is used for a variety of purposes in houses. Good work requires good material, properly prepared, properly installed, and properly protected after it is in place. Use clean water free from organic materials. For plain concrete do not use in excess of 7 gallons of water per sack of cement. For concrete exposed outdoors, for watertight construction, and for reinforced concrete use not more than 6 gallons of water per sack of cement. The water content allowed should include any free water in the aggregate.

The proportions of fine and coarse aggregate, cement, and water should be such as to produce a mixture that will work readily into angles and corners and around reinforcement without allowing the materials to segregate or free water to collect on the surface.

The proportions of cement, sand, and coarse aggregate vary somewhat depending upon the maximum size of the aggregate. With each

bag of cement and 6 gallons of water, use 2½ parts of sand to 2¾ parts of ¾-inch aggregate; 2¼ parts of sand to 3 parts of 1-inch aggregate; or 2¼ parts of sand to 3½ parts of 1½-inch aggregate. Some variations in these proportions may be necessary with some materials to produce a workable mixture, but the water content should not exceed 6 gallons.

Pour the concrete continuously wherever possible and keep it practically level throughout the area being poured. When it is necessary to interrupt pouring for more than a few hours, be sure to clean, score, and wet the top surface of the concrete already poured before adding fresh concrete. All vertical joints should be keyed. Spade, rod, and work the concrete to remove air pockets and force the concrete into all parts of the forms.

In hot weather, protect concrete from rapid drying. Concrete should be kept moist for at least 5 days after it is poured. Rapid drying lowers the strength and may injure the exposed surface of sidewalks and drives.

In freezing weather, keep the temperature of the concrete above freezing until it has set. The rate at which concrete sets is affected by temperature, being much slower at 40° F. and below than at higher temperatures. Heat the water and aggregate, cover the forms with canvas, and supply heat while the concrete is setting.

Footings

The footings act as the base of the foundation and transmit the superimposed load to the soil. The type and size of footings should be suitable for the soil condition, and in cold climates the footings should be far enough below the ground level to be protected from frost action, this depth often being established by local codes. Poured concrete footings are more dependable than those of other materials and are recommended for use in house foundations. Where fill has been used, the foundations should extend below the fill to undisturbed earth. In areas having adobe soil or where soil moisture may cause soil shrinkage, irregular settlement of the foundation and the building it supports may occur. Local practices that have been successful should be followed in such cases.

Wall footings.—The size of the wall footings should comply with local code requirements. One method of determining the size, often used with firm soil, is based on the proposed wall thickness. The footing thickness or depth should be equal to the wall thickness (fig. 5). Footings should project beyond each side of the wall one-half the wall thickness.

If soil is of low load-bearing capacity, wider reinforced footings may be required.

A few rules that apply to footing design and construction are:

1. Footings must be at least 6 inches thick.
2. If footing excavation is too deep, fill with concrete—never replace dirt.
3. Use side forms for footings where soil conditions prevent sharply cut trenches.
4. Place footings below the frostline.

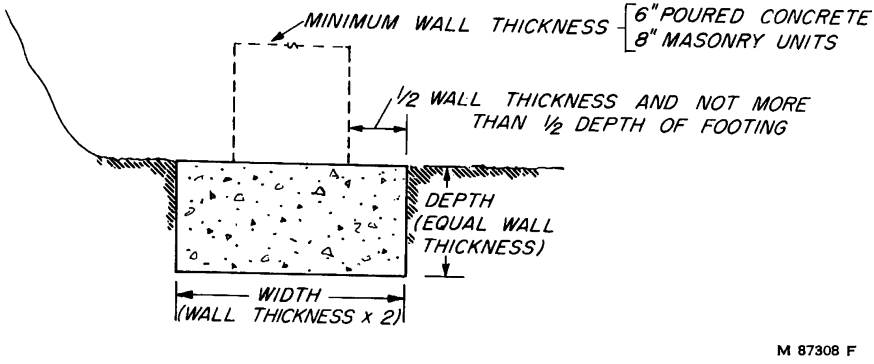

FIGURE 5.—One method often used to determine size of footings.

5. Reinforce footings with steel rods where they cross pipe trenches.
6. In freezing weather, cover freshly poured concrete with straw.

Pier, post, and column footings.—Footings for piers, posts, or columns (fig. 6) should be square and include a pedestal on which the member will bear. A protruding steel pin is ordinarily set in the pedestal to anchor a wood post. Footings vary in size depending on the allowable soil pressure and the spacing of the piers, posts, or columns. Common sizes are 24 by 24 by 12 inches and 30 by 30 by 12 inches. The pedestal is sometimes poured after the footing. The minimum height should be 3 inches above the finish floor and 8 inches above finish grade for basementless areas and similar situations.

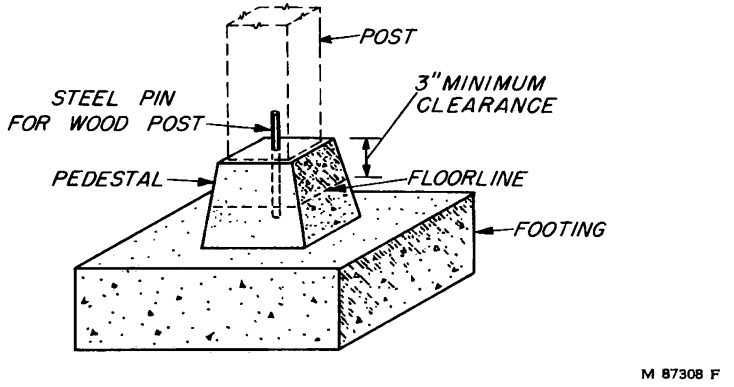

FIGURE 6.—Post or column footing.

Footings for fireplaces, furnaces, and chimneys should ordinarily be poured at the same time as other footings.

Stepped footings.—Stepped footings are often required where the lot slopes, and the vertical part of the step should be poured at the same time as the footing. The bottom of the footing is always placed on undisturbed soil and located below the frostline, and each run should be level.

The vertical connection between footings at the step should be constructed of concrete at least 4 inches thick and of the same width as the footings (fig. 7). On steep slopes more than one step may be required. The vertical distance between steps should not exceed 2 feet and the horizontal distance between steps should be not less than 2 feet. For very steep slopes, where these limitations cannot be maintained, special footings may be required.

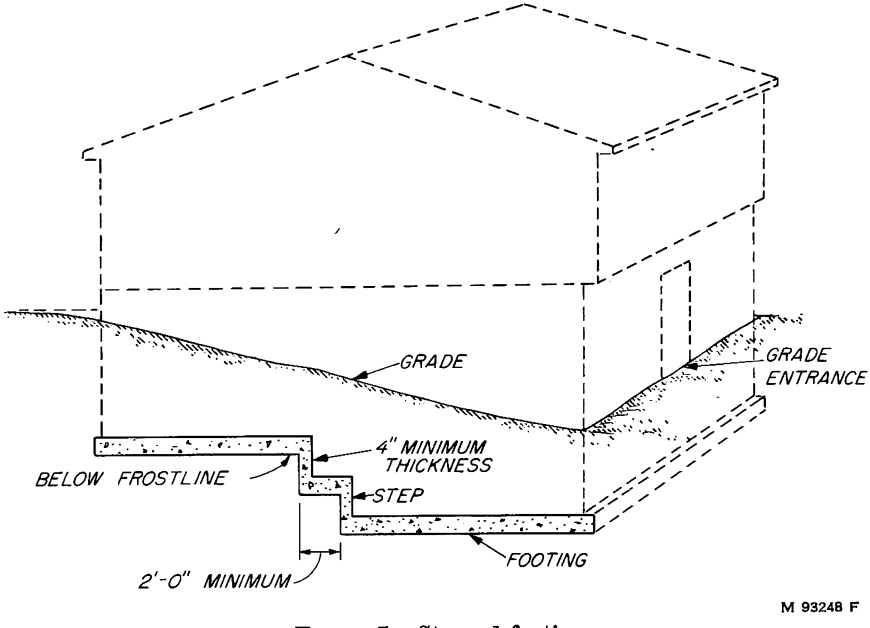

FIGURE 7.—Stepped footings.

Draintile

In some locations, often on sloping ground, subsurface conditions may be such that it is necessary to drain away any subsurface water to prevent damp basements and wet floors. Where drainage is required, draintile are laid around the perimeter of the wall footings.

Plain, round, 4-inch-diameter draintile, 12 inches long, are laid on solid undisturbed earth at the bottom of the footing level with a slight pitch to the outlet. Tile are laid with an open joint of about ⅛ inch, and the top portion of the joint is covered with a strip of roofing felt (fig. 8). The tile are then covered with about 12 inches of gravel. The roofing felt over the joint serves to keep gravel and sand out of the tile, but it allows water to seep through.

The draintile should be connected with a tight-joint pipe to a sump, dry well, storm sewer, or other satisfactory outlet. Dry wells should be used only when they are of sufficient size and when the soil conditions are favorable for such a method of disposal. Dry wells should be located at least 10 feet from the basement walls, 20 feet from disposal fields or seepage pits, and 50 feet from water-supply wells.

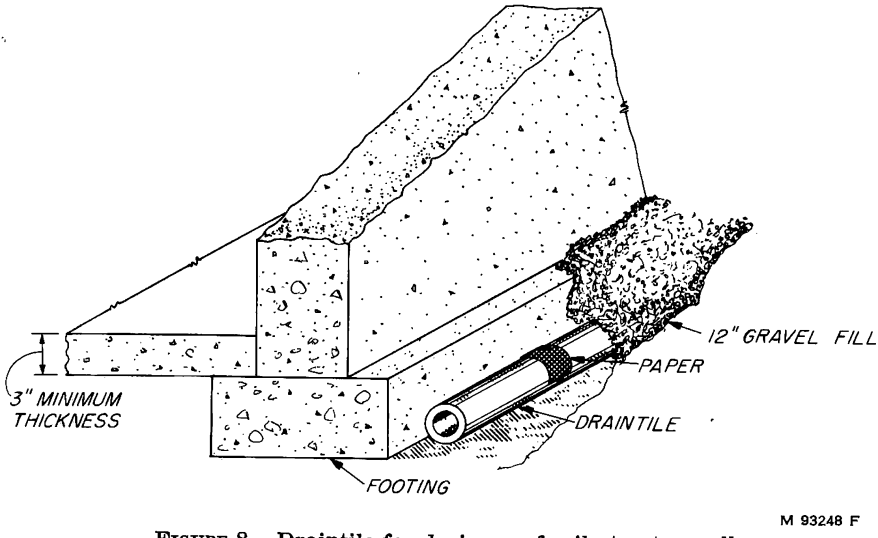

FIGURE 8.—Draintile for drainage of soil at outer wall.

FOUNDATION WALLS AND PIERS

Foundation walls form an enclosure for basements or crawl spaces and carry wall, floor, roof, and other building loads. The two types of walls most commonly used are poured concrete and masonry units of concrete or clay products.

Wall thicknesses and types of construction are ordinarily controlled by local building codes. Thicknesses of poured concrete walls may vary from 6 to 10 inches, and masonry-unit walls from 8 to 12 inches, depending on story heights.

Clear wall height should be not less than 6 feet 10 inches from the top of the finish basement floor to the bottom of the joists; greater clearance is desirable to provide adequate headroom under girders, pipes, and ducts.

Poured Concrete Walls

Poured concrete walls (fig. 9) require forming that must be tight and also braced and tied to withstand the forces of the pouring operation and the pressure of the fluid concrete.

Poured concrete walls should be double-formed (formwork constructed for each wall face). The forms may be constructed of dressed and matched or shiplap sheathing, studs, and joists. It is usually advisable to use special concrete-form nails with two heads, as they can be removed easily and without damage to the wood. The forms can be built in sections and then erected. Reusable forms made of wood, plywood, or steel can also be used.

Spacer blocks of a length equal to the finish thickness of the wall are generally used between the faces of the wood forms as separators. Wire or steel-bar ties hold the forms rigidly against the separators. Steel separators are used with steel forms.

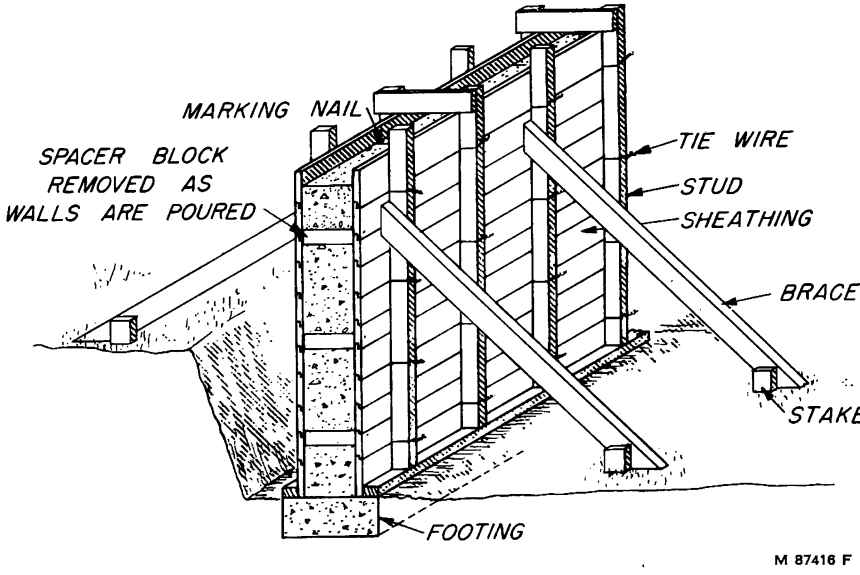

FIGURE 9.—Formwork for poured concrete walls.

Frames for cellar windows, doors, and other openings are set in place when the forming is built, along with boxes that will form notches for the ends of floor beams. Framing and bracing are used to keep the forms in place during pouring.

Nails may be used in wood forms to show the level to which the concrete should be poured (fig. 9). The concrete should be poured continuously without interruption. During the pouring operation it should be continuously puddled to remove air pockets and to work the material under window frames and other blocking. Where wood spacer blocks are used, they should be removed, and not permitted to become buried in the concrete. Anchor bolts for sills should be placed while the concrete is still in a plastic condition.

Forms should not be removed until the concrete has hardened and acquired sufficient strength to support loads imposed during early construction. At least 2 days and preferably a week are required.

Poured concrete walls can be damp-proofed with 1 heavy coat of hot asphalt or hot tar applied on the outside from the footings to the finish gradeline. Such coatings are usually sufficient to make a wall watertight against ordinary seepage, such as may occur after a rainstorm. In poorly drained soils a membrane such as that described for concrete-block walls may be necessary.

Concrete-Block Walls

Blocks are available in various sizes and shapes, but those most widely used come in nominal sizes 8 inches high, 16 inches long, and 8, 10, or 12 inches wide, the actual size being somewhat less than the nominal size to allow for the joint.

Concrete-block walls require no formwork. Block courses start at the footing and are laid up with 3/8- to 1/2-inch mortar joints. Joints should not exceed 3/4 inch, and should be tooled smooth to resist water seepage. Full bedding of mortar should be used on all contact surfaces of the block. When pilasters (column-like projections) are required by building codes or to strengthen a wall, they are placed on the interior side of the wall and terminated at the bottom of the beam or girder supported. Basement door and window frames should be set with keys for rigidity and to prevent air leakage (fig. 10). Block walls should be capped with 4 inches of solid masonry or concrete reinforced with wire mesh.

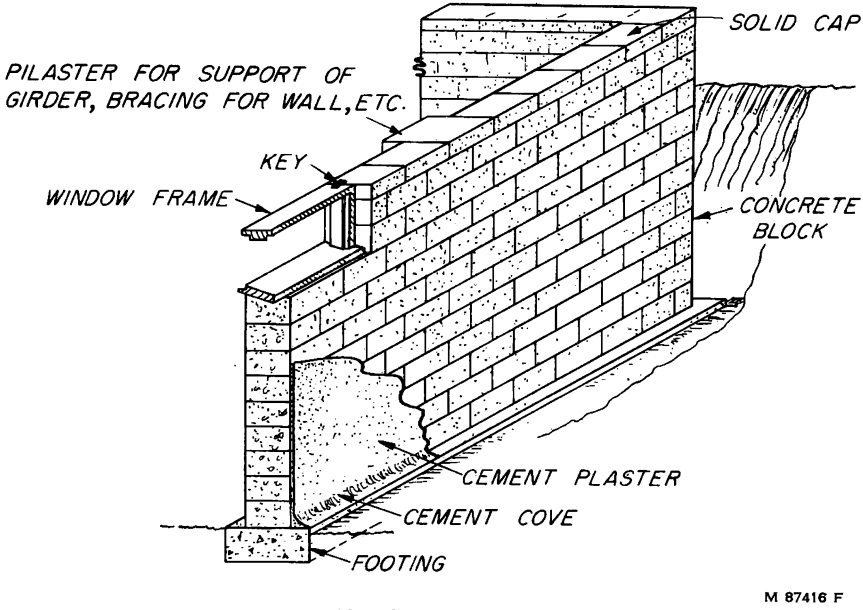

FIGURE 10.—Concrete-block walls.

Freshly laid block walls should be protected in temperatures below freezing. Freezing of the mortar before it is set will result in low adhesion, low strength, and joint failures.

Concrete-block walls should be calked with an elastic calking compound at the outside joint between the footing and the wall and then coated with 1/2 inch of Portland-cement plaster from the footings to the gradeline. A cove should be formed at the juncture of the wall and footings (fig. 10). At least one coat of hot asphalt or hot tar should be applied over the plaster to provide minimum protection from water seepage. For added protection where wet soil conditions may be encountered, a waterproof membrane of roofing felt can be mopped on, with shingle-style laps of 4 to 6 inches, over the plastic coating. Hot tar or hot asphalt can be mopped over the membrane. This covering will prevent leaks if minor cracks develop in the blocks or joints between the blocks.

Masonry Piers

Masonry or poured concrete piers are often used to support floor framing in one-story houses without basements. The minimum sizes for masonry piers are 8 by 16 or 12 by 12 inches, those for poured concrete piers 10 by 10 inches square or 12 inches in diameter. The spacing of piers should not exceed 8 feet on center under exterior wall beams and interior girders set at right angles to the floor joists, and 12 feet on center under exterior wall beams set parallel to the floor joists. Exterior wall piers should not extend above grade more than 4 times their least dimension unless supported laterally by masonry or concrete walls. The minimum height above grade should be 8 inches, and piers of hollow masonry units should be capped with at least 6 inches of solid masonry or concrete. A 12- by 12-inch hollow brick pier with a 4- by 4-inch core filled with concrete is strong and provides good anchorage for the sill anchor.

Sill Anchors

In wood frame construction the sill plate should be carefully leveled on a bed of mortar that levels off irregularities on the top of the concrete, and then anchored to the foundation wall. This is commonly done with ½-inch anchor bolts spaced not more than 8 feet apart with at least 2 bolts in each sill piece around the perimeter of the wall (fig. 11). Anchor bolts should be embedded at least 6 inches in poured concrete walls, and at least 15 inches in concrete-block walls. A large flat washer is placed in the mortar joint of concrete-block walls to fix firmly the bottom end of the bolt. If termite shields are used, they should be installed before the mortar bed is laid for the sills.

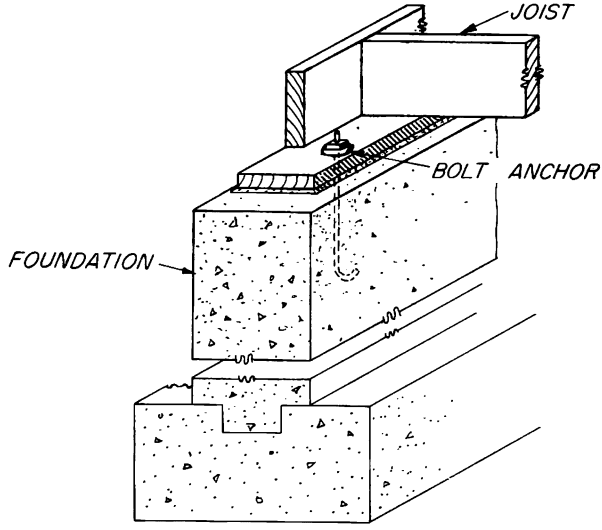

M 95476 F

FIGURE 11.—Method of anchoring floor system to poured concrete walls, showing bolt for wood sill.

Reinforcing and Wall Ties

Some foundation-wall constructions include window and door frames the head jambs of which are below the top of the foundation wall. This type of construction requires that a properly designed steel or reinforced-concrete lintel be built over the frame (fig. 12, *A*). In poured walls, the rods are laid in place while the concrete is being poured so that they are at least 1½ inches above the face of the opening. Frames should be prime painted before installation.

Where concrete work includes a connecting porch or garage wall not poured with the main basement wall, it is necessary to provide reinforcing-rod ties (fig. 12, *B*). These rods are placed during pour-

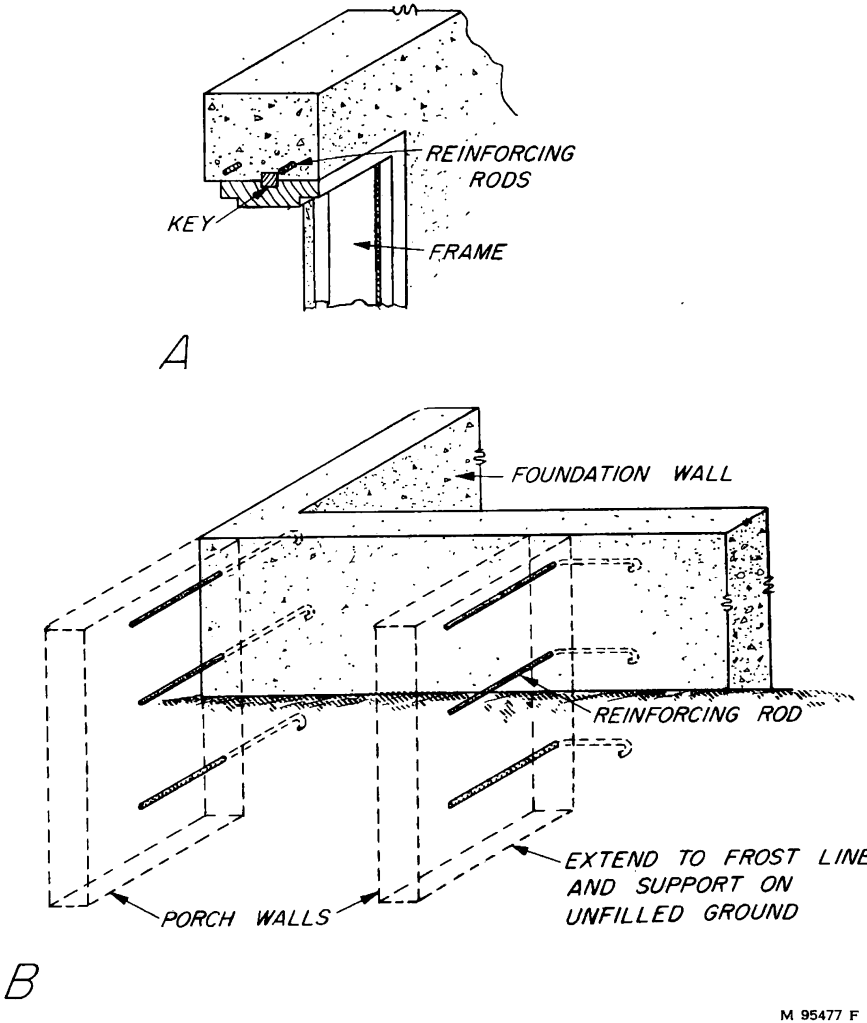

FIGURE 12.—Steel reinforcing rods in poured concrete walls. *A*, reinforcing rods used over a frame; *B*, reinforcing ties for porch or garage walls.

304696 O—55——2

ing of the main wall and, if of proper size and spacing, insure good structural ties. Keyways may be used in addition to the reinforcing. Such connecting walls should extend down to the frost-line and be supported on undisturbed ground.

Brick or Stone Veneer

If masonry veneer is used for the outside finish, the foundation must include a supporting ledge or offset at least 5 inches wide (fig. 13). There should be a space of about 1 inch between the masonry and the sheathing. A base flashing should extend from the outside face of the wall, over the top of the ledge, and at least 12 inches up the face of the sheathing if sheathing paper is used. If no sheathing paper is used, the base flashing should extend 12 inches upward back of the sheathing. Corrosion-resistant metal ties should be used to bond the veneer to the framework; they are spaced 32 inches apart horizontally and 15 inches vertically. Where other than wood sheathing is used, secure the ties to the studs.

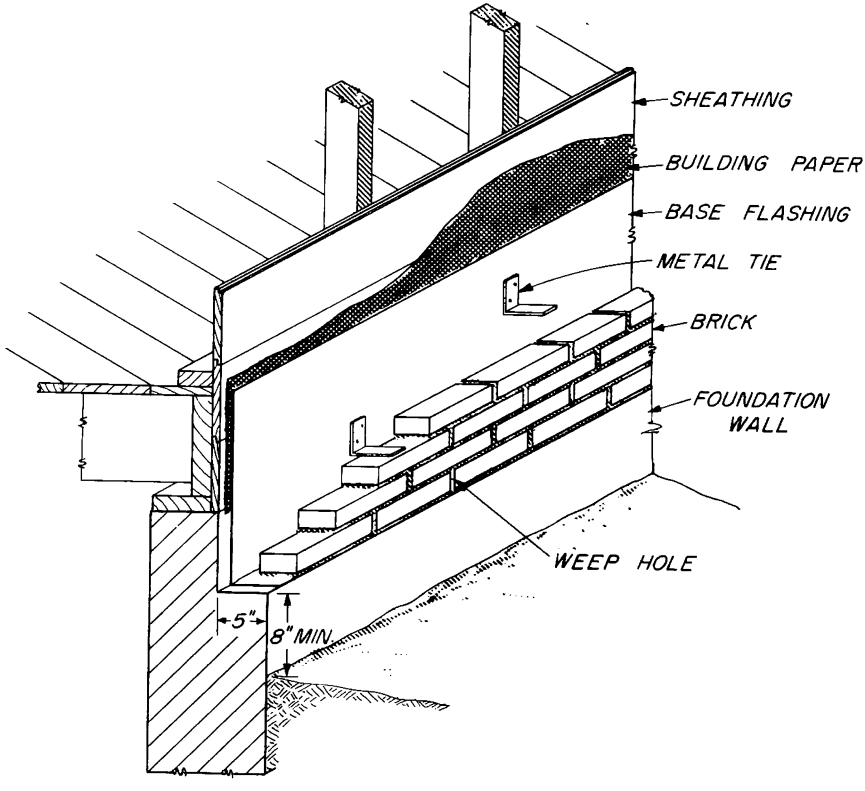

M 93245 F

FIGURE 13.—Ledge in foundation wall for support of brick-veneer or other masonry finish.

Weep holes are provided about 4 feet apart in the bottom course of veneer by leaving the mortar out of vertical joints. Where brick is used, thickness of the veneer should be not less than 3¾ inches. Where ashlar-stone masonry is used, the minimum thickness for one-story dwellings is 3 inches and that for two-story dwellings 4 inches.

Select a type of brick intended for exposure to the weather. Such brick is hard and low in water absorption. Sandstone and limestone are most commonly used for stone veneer. These materials vary widely in quality. Select materials known locally to be durable and proved satisfactory in service.

Mortar for veneer masonry may be 1 part Portland cement, 2 parts mason's hydrated lime, type S, and not more than 9 parts sand by volume. A stronger and better mortar may be obtained with 1 part of type II masonry cement and not more than 3 parts of sand by volume. Brick and stone should be laid in a full bed of mortar; avoid dropping mortar into the space between the veneer and sheathing. Outside joints should be tooled to a smooth finish to get the maximum resistance to water penetration.

Masonry laid during cold weather should be protected from freezing until after the mortar has set.

Notch for Wood Beams

When basement beams or girders are of wood, the wall notch or pocket for such members should be big enough to allow at least ½ inch of clearance at sides and ends of the beam for ventilation (fig. 14). There is a decay hazard where beams and girders are so tightly set in wall notches that moisture cannot readily escape.

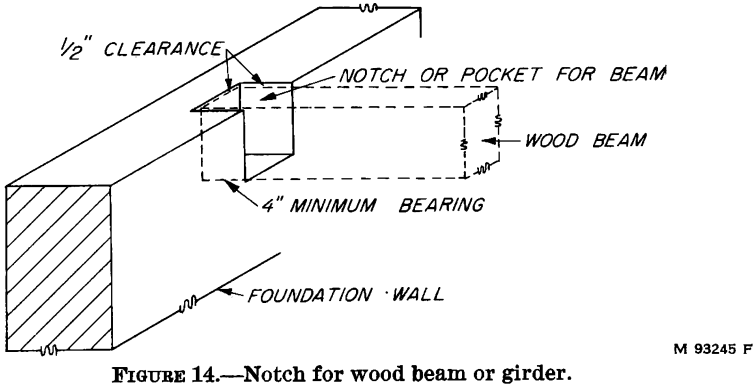

FIGURE 14.—Notch for wood beam or girder.

Termite Protection

Certain areas of the country, particularly the Atlantic Coast, Gulf States, Mississippi and Ohio valleys, and southern California, are infested with wood-destroying termites. It is therefore desirable that in such areas wood construction over a masonry foundation be protected by one or more of the following methods:

1. Poured concrete foundation walls.

2. Masonry unit foundation walls capped with reinforced concrete.
3. Metal shields made of rust-resistant material. Metal shields are effective only if they extend beyond the masonry walls and are continuous, with no gaps or loose joints.
4. Wood-preservative treatment. This method protects only the members treated.

See page 197 for further details of termite protection.

CONCRETE FLOOR SLABS ON GROUND

Basements have been eliminated in many one-story houses built in recent years.

The primary function of a basement has been to provide a space for a central heating plant and for the storage and handling of bulk fuel and ashes. It also provides space for laundry and other utilities. With the wide use of liquid and gas fuels, however, the need for fuel and ash storage space has been greatly curtailed; and because space can be compactly provided on the ground-floor level for the heating plant, laundry, and other utilities, the principal need for a basement disappears.

One common type of floor construction for basementless houses is a concrete slab over a suitable foundation. Sloping ground or low areas are usually not ideal for slab-on-ground construction because of structural and drainage problems (*2*).[2]

The finish flooring for concrete floor slabs on the ground has usually been asphalt tile laid in mastic directly on the slab. Because such concrete floors built some years ago did not prove satisfactory in a number of instances, considerable prejudice has been built up against this method of construction. The common complaints have been that the floors are cold and uncomfortable and that condensation sometimes collects on the floor, near the walls in cold weather and elsewhere during warm, humid weather. Some of these undesirable features of concrete floors on the ground apply to both warm and cold climates, and others are present only in cold climates. Improvements in methods of construction based on past experience and research have materially reduced the common faults of the slab floor.

Floors are cold principally because of loss of heat through the floor and the foundation walls, with most of the heat loss occurring around the exterior walls. Suitable insulation around the exterior walls will help to reduce the heat loss. Radiant floor-heating systems are most effective in preventing cold floors and floor condensation problems. Peripheral warm-air heating ducts are also effective in this respect. Moisture barriers over a gravel fill under the floor slab are provided to prevent soil moisture from rising through the slab.

Basic Requirements

Certain basic requiremenets should be met in the construction of concrete floor slabs on the ground to prevent or minimize the faults encountered in the past. These requirements are as follows:

1. Establish finish-floor level high enough above the natural grade

[2] Italic figures in parentheses refer to Literature Cited, p. 214.

so that the finish grade will provide good drainage away from the walls.

2. Remove all debris, topsoil, stumps, and organic matter, and provide a smooth surface free from pockets. Tamp soil where loose.

3. Install sewer, water, gas, and oil supply lines and other subsurface work before pouring the slab.

4. Fill the space between the soil level and the underside of the slab with coarse gravel or crushed rock, well tamped down. In no case should the fill be less than 4 inches.

5. Lay a vapor barrier over the gravel to prevent soil moisture from working into and through the slab and cement fines from working into the voids of the fill. Lap and seal the joints with asphalt. The vapor barrier must be sufficiently strong and so placed as to prevent any perforation during construction operations and the placing of the concrete.

6. Install a permanent, waterproof, nonabsorptive type of rigid insulation around the perimeter of the wall in accordance with the requirements of the climate (table 1). In very mild climates insulation may not be required, but an expansion joint may be desirable.

7. Reinforce the slab with wire mesh weighing not less than 20 pounds per 100 square feet, or with 6- by 6-inch No. 10 wire mesh. The concrete slab should be at least 4 inches thick and should be as specified under Concrete Work, page 5.

8. Before the base has hardened, give the slab an integral finish or a topping consisting of 1 part of cement to 3 parts of sand, not less than 1 inch thick, and troweled to a smooth, level finish.

Combined Slab and Foundation

The combined slab and foundation, sometimes referred to as the thickened-edge slab, is suited to warm climates where frost penetration is not a problem and where soil conditions are especially favorable to its use. It consists of a shallow perimeter reinforced footing

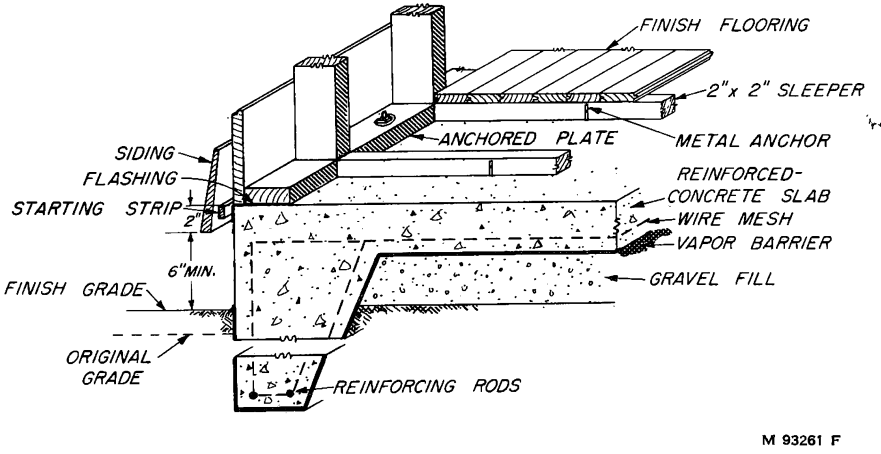

FIGURE 15.—Combined slab and foundation. The gravel fill should be of a size that will be retained on a 1-inch-mesh screen.

poured integrally with the slab (fig. 15). The bottom of the footing should be at least 1 foot below the natural gradeline and be supported on solid, unfilled, and well-drained ground.

TABLE 1.—*Resistance values used in determining minimum amount of edge insulation for concrete floor slabs on ground for various design temperatures*

Heating design temperature (°F.)	Depth insulation extends below grade		Resistance (R) factor	
			No floor heating	Floor heating
	Feet	*Inches*		
−20	2	0	2.00	3.00
−10	1	6	1.75	2.62
0	1	0	1.50	2.25
+10	1	0	1.25	1.87
+20	1	0	1.00	1.50

Independent Concrete Slab and Foundation Walls

When the ground freezes to any appreciable depth during winter, slab floors require footings or foundation walls that extend below the frostline and to solid bearing on unfilled soil (figs. 16, 17, 18, 19). Properly designed footings should be provided for the support of heavy concentrated loads, such as a masonry chimney or fireplace. Anchor bolts should be provided for securing the wood sill plates to the foundation walls.

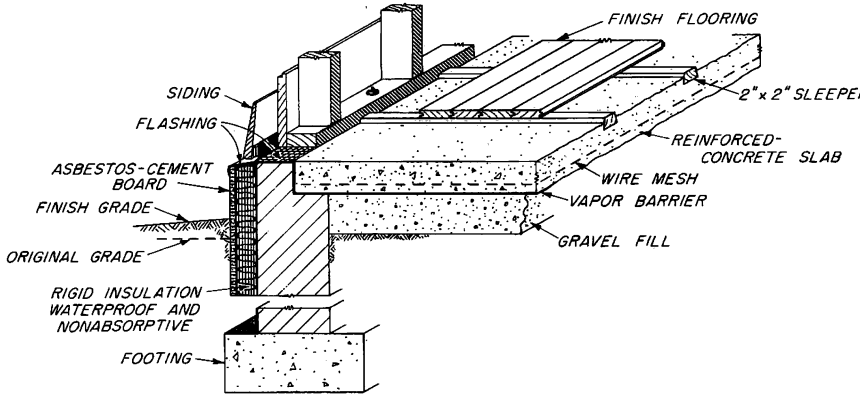

M 93261 F

FIGURE 16.—Independent slab and foundation walls. In the method of construction shown, insulation is located at the exterior surface of the wall. This method of installation may also be used on existing slab houses to minimize cold floors. One method of laying the finish floor is shown. Sleepers shown are 2 by 2 wood members pressure treated with preservative and embedded in the concrete.

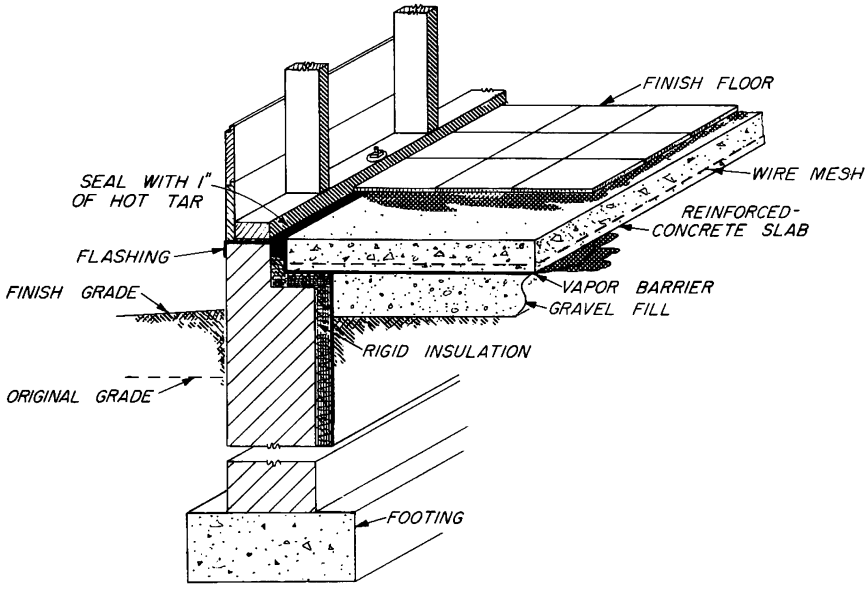

M 93244 F

FIGURE 17.—Concrete slab with foundation walls. Insulation is located around the exterior walls. Vapor barriers are installed below the slab and on the warm side of the insulation, as shown. Insulation extends to within 1 inch of top of floor slab, and the space above the insulation to the top of the slab is sealed off with hot tar.

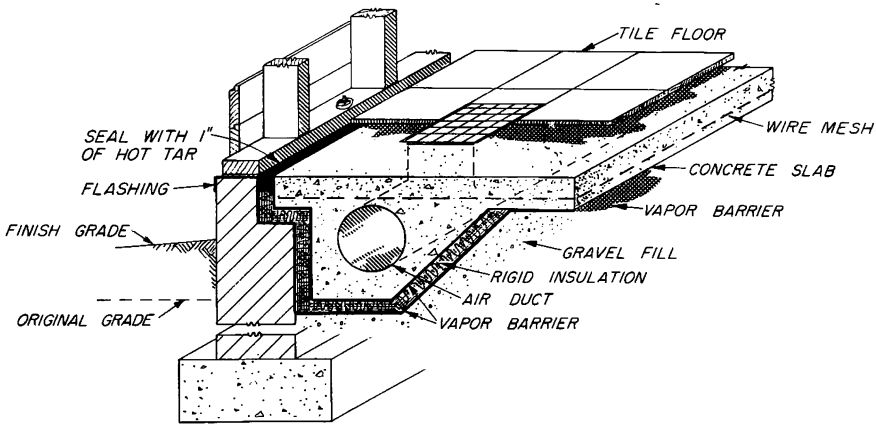

M 93246 F

FIGURE 18.—Independent concrete floor slab and foundation wall. Duct work located in slab around the exterior wall. A permanent type of vapor barrier is provided on both sides of insulation to stop soil moisture and to provide protection from cold-weather condensation.

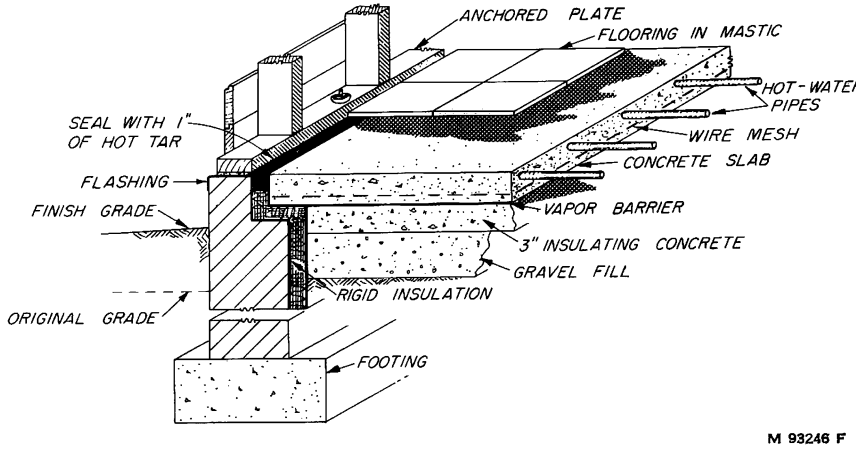

FIGURE 19.—Independent concrete floor slab and concrete walls. Radiant-heating pipes are embedded in the floor.

Vapor Barrier Under Concrete Slab on Ground

The properties desired in a vapor barrier are high resistance to vapor transmission, resistance to damage from moisture, and ability to withstand rough usage before concrete is poured. Materials having these properties to a high degree are: (1) smooth-surface 55-pound roll roofing laid with a 6-inch lap and with the lap sealed with asphalt, and (2) three layers of roofer's felt, each layer mopped with hot asphalt.

Insulation Requirements for Concrete Floor Slabs on Ground

The proper location of insulation for concrete floor slabs on grade is shown in figures 16 to 19. The thickness of the insulation will depend upon the requirements of the climate and upon the material used for insulation.

All building materials have some resistance to heat transmission, some more than others. Values for the resistance to heat transmission have been established for most building materials, and such values can be expressed in terms of the thermal conductivity or resistivity of the particular material. For convenience, resistivity, or the R factor, has been used here and represents the temperature difference in Fahrenheit degrees required to force 1 British thermal unit per hour through 1 square foot of material 1 inch thick.

Table 1 lists the resistance values, or R factor, that should be used in determining the minimum amount of insulation recommended for various design temperatures, with and without floor radiant heating. For example, should the design temperature require an R factor of 3.00 and the insulation chosen have an R factor of 1.82 per inch of thickness, the total thickness would be

$$\frac{3.00}{1.82},$$

or 1.65 inches. For convenience, a 2-inch thickness would be used, which would increase the R factor to 2×1.82, or 3.64. The insulation should extend below grade to the minimum depth shown in the table.

Insulation Types

The properties desired in insulation for floor slabs are high resistance to heat transmission, permanent durability when exposed to dampness and frost, and high resistance to crushing due to floor loads, weight of the slab, or expansion forces. It should also be immune to fungus and insect attack, and it should not absorb or retain moisture. Examples of materials considered to have these properties follow (*38, pp 149–159*).

1. Cellular-glass insulation board, available in slabs 2, 3, 4, and 5 inches thick. R factor, or resistivity, 1.82 to 2.22 per inch of thickness. Crushing strength, approximately 150 pounds per square inch. Easily cut and worked. The surface may spall away if subjected to moisture and freezing. It should be dipped in roofing pitch or asphalt for protection.

2. Glass fibers with plastic binder, coated or uncoated, available in thickness of ¾, 1, 1½, and 2 inches. R factor, 3.33 to 3.85 per inch of thickness. Crushing strength, about 12 pounds per square inch. Water penetration into coated board is slow and inconsequential unless the board is exposed to a constant head of water, in which case this water may disintegrate the binder. Use a coated board or apply coal-tar pitch or asphalt to uncoated board. Coat all edges. Follow manufacturer's instructions for cutting.

3. Wood or other plant fiber boards, available in thicknesses of ½, 25/32, 1 inch, and multiples of 1 inch. R factor, 2.50 to 2.86 per inch of thickness. Crushing strength adequate when material is dry. Boards should be coated on all sides and edges with coal-tar pitch or asphalt. Such coatings offer protection from temporary wetting but not from continuous or long-time exposure to moisture. These materials should not be used where they may come in contact with moisture.

Under service conditions there are two sources of moisture that might affect wood or other plant-fiber insulating materials: (1) vapor from inside the house, and (2) moisture from soil. Vapor barriers and coatings may retard but not wholly prevent the penetration of moisture into the insulation. Dampness may reduce the crushing strength of insulation, which may in turn permit the edge of the slab to settle. Compression of the insulation, moreover, reduces its efficiency. Insulating materials should perform satisfactorily in any position if they do not change dimensions and if they are maintained in a dry condition.

4. Insulating concrete. Expanded mica aggregate, 1 part cement to 6 parts aggregate, thickness used as required. R factor, about 1.1 per inch of thickness. Crushing strength, adequate. It may take up moisture when subject to dampness, and consequently its use should be limited to locations where there will be no contact with moisture from any source.

5. Concrete made with lightweight aggregate, such as expanded slag, burned clay, or pumice, using 1 part cement to 4 parts aggregate; thickness used as required. R factor, about 0.40 per inch of thickness. Crushing strength, high. This lightweight aggregate may also be used for foundation walls in place of stone or gravel aggregate.

Radiant-Heating Installation

Radiant-heating systems are sometimes used in concrete floor slabs on the ground. Some forced-air heating systems provide for cold-air returns below the floor as shown in figure 18. A forced-hot-water radiant-heating system supplies heat to small copper, wrought-iron, or steel pipes embedded in the concrete in serpentine pattern throughout the floor area (fig. 19).

Termite Protection

In areas where termites are a problem, certain precautions are necessary for concrete slab floors on the ground. Leave a countersink-type opening 1 inch wide and 1 inch deep around plumbing pipes where they pass through the slab, and fill the opening with hot tar when the pipe is in place. Where insulation is used between the slab and the foundation wall, the insulation should be kept 1 inch below the top of the slab and the space should be filled with hot tar. Further explanation of termite protection is given on pages 194–201.

Finish Floors Over Concrete Slabs on the Ground

A natural concrete surface is sometimes used for the finish floor, but generally it is not considered wholly satisfactory. Special dressings are required to prevent dusting. Moreover, such floors tend to feel cold to the touch. Asphalt tile laid in mastic in accordance with the manufacturer's recommendations is comparatively economical and easy to clean, but it also has the disadvantage of feeling cold. Wood tile in various forms and wood parquet flooring may be used, also laid in mastic in accordance with the manufacturer's recommendations. Tongued-and-grooved wood flooring $^{25}/_{32}$ inch thick may be used, but it should be laid over pressure-treated wood sleepers anchored to the slab. The sleepers usually consist of 2- by 2-inch members spaced 16 inches on center, anchored to the concrete by means of metal clips (fig. 15) or embedded in the slab. Finish flooring is laid across the sleepers.

FLOOR FRAMING

In a wood-frame house the floor framing consists specifically of the posts, sills, girders, joists, bridging, and subfloor. Masonry walls are sometimes used instead of posts and girders to support the floor joists and center bearing partition (*19*).

Other types of floor construction are sometimes used in wood-frame houses, and they consist of reinforced concrete beams and slabs, precast concrete beams and slabs, or various combinations of steel joists and wood, steel, or concrete floors.

Wood Joists and Subflooring

The usual quality requirements for floor-joist (*41*) material are good bending strength, stiffness, freedom from warp, and good nail-withdrawal resistance. Joists are generally 2-inch-thick dimension lumber. All species of softwood framing lumber are acceptable provided they comply with size and grade requirements for the spans (*17*).

Since all species are not equal in strength properties, the weaker species must be used in larger sizes to provide adequate stiffness for a given span.

The requirements (*41*) for subflooring boards are not exacting, but good stiffness, nail-holding power, and ease of working are desirable. Generally 1-inch boards 4, 6, or 8 inches wide are used. No. 3 Common is the minimum grade for such species as Douglas-fir, southern cypress, western hemlock, redwood, the cedars, eastern hemlock, tamarack, and southern yellow pine. No. 4 Common is the minimum grade for subflooring for white fir, western larch, spruce (except Sitka), ponderosa pine, sugar pine, Idaho white pine, northern white pine, and red pine. All subflooring should be of uniform thickness.

All framing lumber and subflooring should be well seasoned (*57*). Lumber 2 inches thick and less should have a moisture content not to exceed 19 percent for conventional construction and 12 percent for shop fabricated construction.

Posts and Girders

Posts.—Wood or steel posts are generally used in the basement to support girders, which are the structural members that support the inner ends of the first-floor joists (fig. 20). However, masonry piers are sometimes used for this purpose, or the joists may be supported directly on a masonry wall.

The round post and H-section are the common types of structural steel posts, and are supplied with a steel bearing plate at each end designed for size in accordance with standard engineering practice.

Wood posts should be solid and not less than 6 by 6 inches in size for use in a basement. They should be squared at both ends and securely fastened to the girder (fig. 20, *B*). If necessary for full bearing, a bearing plate should be used between the post and the girder. The bottom of the post should rest on the top of a masonry pedestal that is at least 3 inches above the floor.

The posts are generally spaced 8 to 10 feet on center, depending on the size and strength of the girder.

Girders.—Both wood and steel girders are used in present-day house construction. One advantage of steel is that there is less of a shrinkage problem. For steel girders, the I-beam is the commonly used shape. Wood girders are of two types, solid and built-up. The built-up girder (fig. 21) is usually made up of two or more pieces of 2-inch-dimension lumber spiked together, the ends of the pieces joining over a supporting post. A two-piece girder may be nailed from one side with tenpenny nails, two in each end of each piece and others driven stagger fashion 16 inches apart. A three-piece girder is nailed from each side with twentypenny nails, two near each end of each piece and others driven stagger fashion 32 inches apart (*24*).

Ends of wood girders should bear at least 4 inches on the masonry walls or pilasters. A ½-inch air space should be provided at each end and at each side of wood girders framing into masonry (fig. 21). The top of the girder should be level with the top of the sill plates on the foundation walls, unless ledger strips or notched joists are used. Steel plates at ends of girders should be of full bearing size.

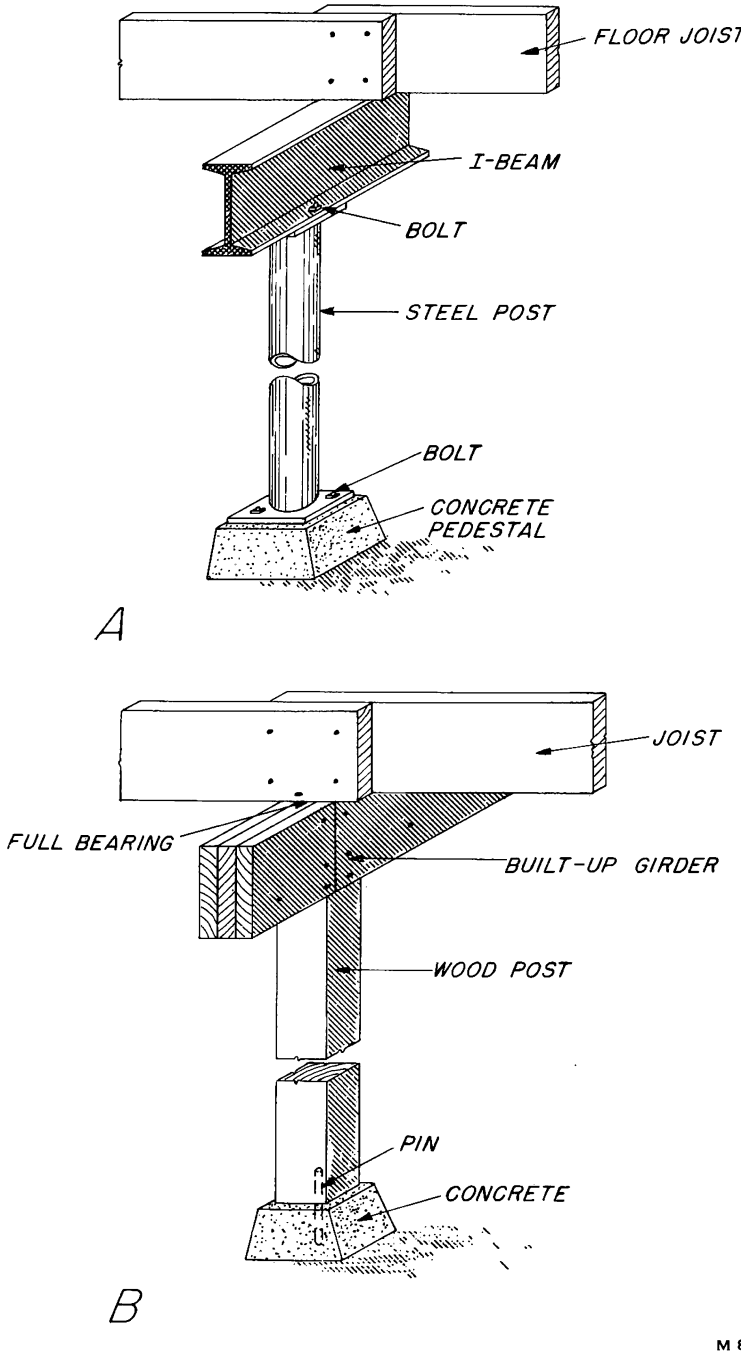

FIGURE 20.—Posts for wood and steel girders. *A*, Steel post used with steel I-beam (a steel post may also be used with wood beams); *B*, wood post used under a built-up wood girder.

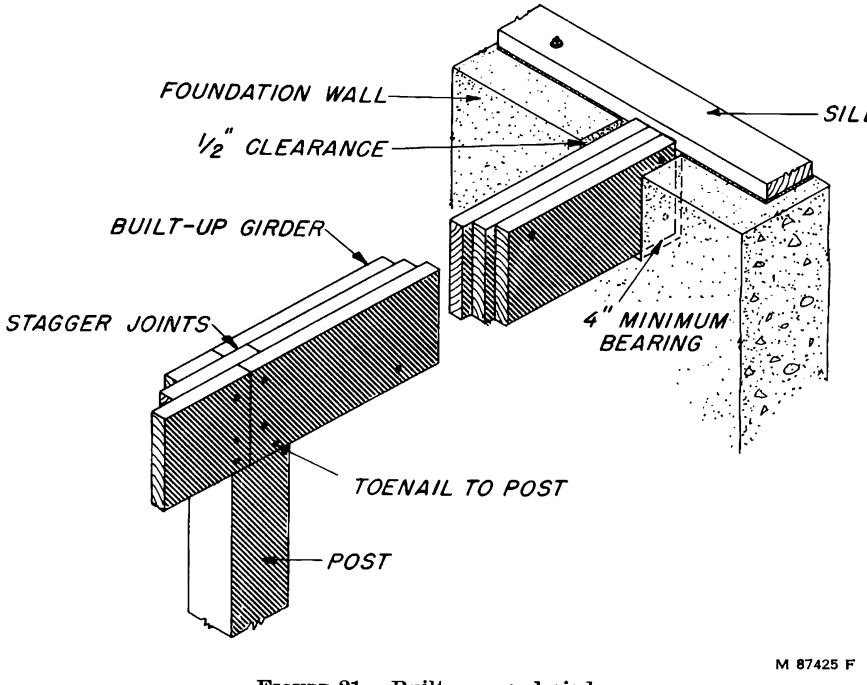

FIGURE 21.—Built-up wood girder.

Girder-Joist Installation

The simplest method of floor and joist framing is to have the joist rest on top of the girder, in which case the top of the girder coincides with the top of the sill plate (fig. 21). This method is used where basement heights provide adequate headroom below the girder. Its main disadvantage is that shrinkage effects are greater with this type of construction than they are when ledger strips are used.

Where more clearance is desired under a girder, ledger strips are securely nailed to each side of the girder to support the joists (fig. 22). Joists are toenailed to the wood girder and nailed to each other where they lap over the girder (*24*). Care should be taken to obtain full bearing on top of ledger strip.

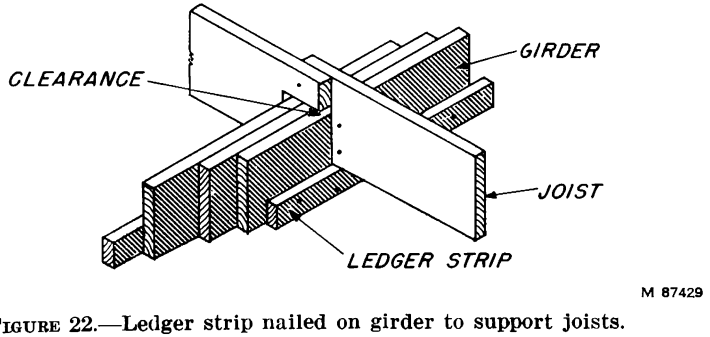

FIGURE 22.—Ledger strip nailed on girder to support joists.

In order to provide space for heat ducts in a partition supported on the girder, a spaced girder is sometimes used (fig. 23). Solid blocking is used at intervals between the two members. A single post support for a spaced girder usually requires a bolster, preferably of metal, with span sufficient to support the two members.

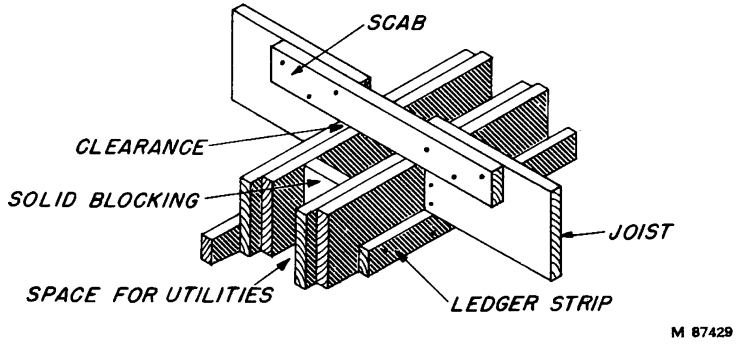

FIGURE 23.—Spaced girder.

Types of Wood Sill Construction

The two general types of wood sill construction used over the foundation wall conform either to platform or balloon framing construction. The box sill is that type commonly used in platform construction. It consists of a plate anchored to the foundation wall, for the support and fastening of the joists and header at the ends of the joists (fig. 24).

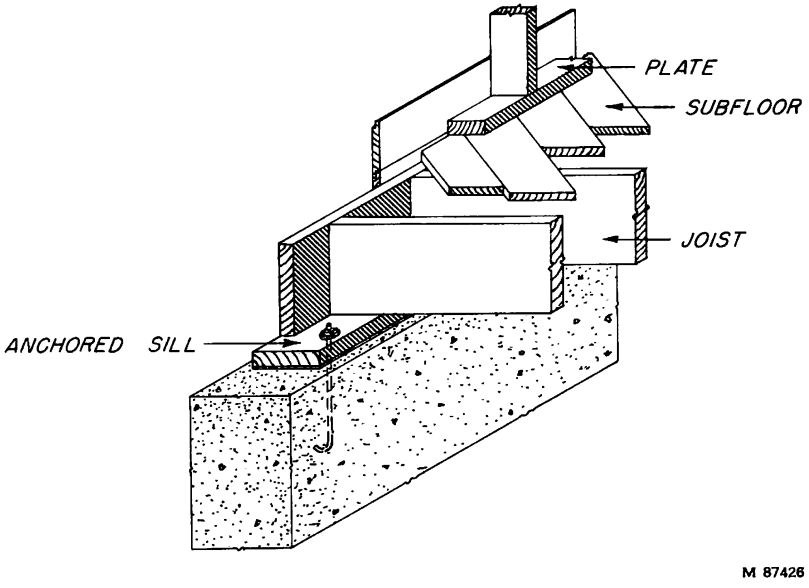

FIGURE 24.—Type of sill used in platform construction.

The balloon-frame type of construction also uses a sill plate upon which the joists rest. The studs also bear on this plate, and they are nailed to both the floor joists and the plate. The subfloor is laid diagonally or at right angles to the joists, and a firestop is cut in between the studs at the floor line (fig. 25). When diagonal subfloor is used, a nailing member is required between the joists and studs at the wall lines.

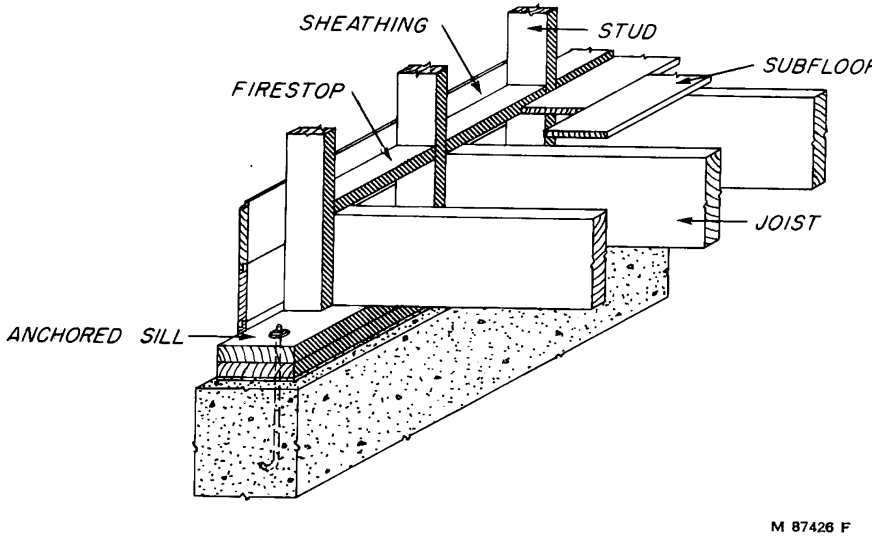

FIGURE 25.—Type of sill used in balloon frame construction.

Because there is less potential shrinkage in exterior walls with balloon framing than in the platform type, balloon framing is preferred over the platform type in stucco, brick- or stone-veneer houses.

Floor Joists

Joists are selected to meet strength and stiffness requirements. Strength requirements are dependent upon the loads to be carried. Stiffness requirements are intended to limit plaster cracking under live loads. Stiffness is also of importance in limiting vibrations from moving loads—often a cause of annoyance to occupants.

Wood floor joists are generally of 2-inch (nominal) thickness and of either 6-, 8-, 10-, or 12-inch (nominal) depth. The size depends upon the loading, length of span, spacing between joists, and the species and grade of lumber used.

Tables of permissible spans for floor joists are published by the Federal Housing Administration (*17*).

Joist installation.—After the sills have been leveled on the mortar beds and anchored to the foundation walls and piers, the joists are located and spaced in accordance with the design. (Sixteen-inch center-to-center spacing is most commonly used.)

Any joists having a slight bow edgewise should be so placed that the crown is on top. A crowned joist will tend to straighten out when subfloor and normal floor loads are applied. The largest edge knots should be placed on top, since knots on the upper side of a joist are on the compression side of the member.

A header joist is end-nailed to each joist with twenty-fourpenny nails at the corner and two at intermediate joists. In addition, the header joist and the end joist parallel to the exterior walls in platform construction (fig. 26) are toenailed to the sill with sixteenpenny nails spaced 16 inches on center. Joists are lapped a minimum of 4 inches at girders and nailed together with three sixteenpenny nails, and they are toenailed to the girder with one sixteenpenny nail on each side (*24*).

Joists should be doubled under all bearing partition walls; and if spacing is required for heat ducts, solid blocking should be used between the joists.

Details at floor openings.—When framing for large openings such as stair wells, fireplaces, and chimneys, the joists and headers framing the opening should be doubled (fig. 27). The proper ways of nailing (*24*) are shown in figure 27.

Joist hangers and short sections of angle iron are often used as joist supports for the larger openings. For further details of stair wells, see Stairs, page 155.

Bridging

Bridging is usually used between joists at midspan to stiffen the joists and to help transfer concentrated loads. Cross-bridging (fig. 26) is the type most commonly used. It is usually made up of 1- by 3-inch material. Wood bridging is cut at an angle to fit diagonally between the joists and each piece is nailed at the top and bottom with two eightpenny nails (*24*) (fig. 26). Metal bridging of rigid type with nailing flanges may also be used. In either case the bottom is not usually fastened until house framing is complete. The maximum spacing between bridging should not exceed 8 feet, and long joist spans may require two lines of bridging.

Subfloor

Subflooring should consist of (*a*) square-edge or tongue-and-groove boards no wider than 8 inches and not less than $^{25}/_{32}$ inch thick, or (*b*) plywood.

Boards.—Tongue-and-groove end-matched boards may be used, but they should be applied so that each board will bear on at least two joists and so that there will be no two adjoining boards with end joints occurring between the same pair of joists. Subflooring is nailed to each joist with two eightpenny nails for widths under 8 inches and with three nails for 8-inch widths (*24*). In square-edged boards joints should always be made over the joists. Subflooring may be applied either diagonally or at right angles to the joists. When subflooring is placed at right angles to the joists, the finish floor should be laid at right angles to the subflooring. Diagonal subflooring permits finish floor to be laid either parallel or perpendicular to the joists.

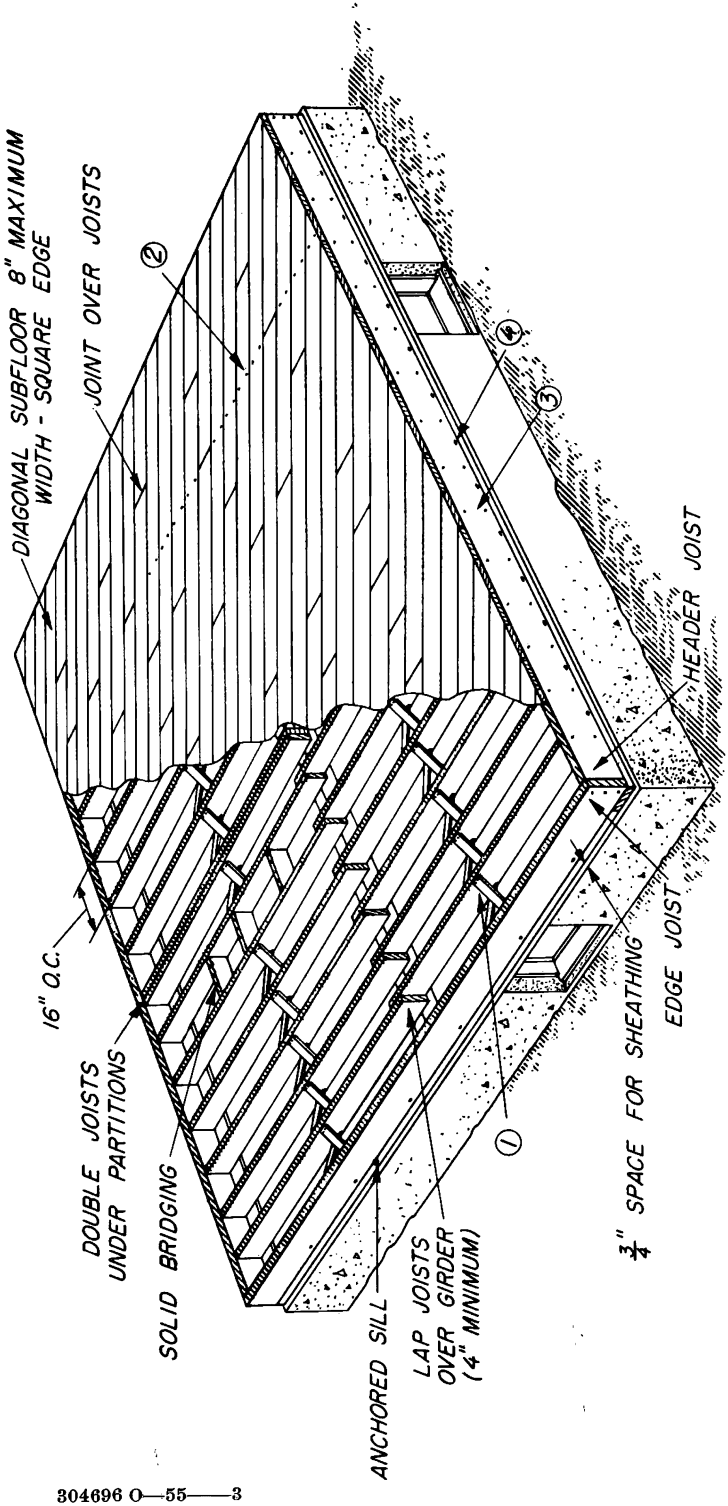

FIGURE 26.—Floor framing. (1) One- by three-inch bridging nailed at top and bottom with two eightypenny nails; (2) subfloor board nailed with two or three eightypenny nails; (3) header joist end-nailed to corner joists with three twentypenny nails and intermediate joists with two twentypenny nails; (4) header joist toenailed to sill with tenpenny nails 16 inches on center.

304696 O—55——3

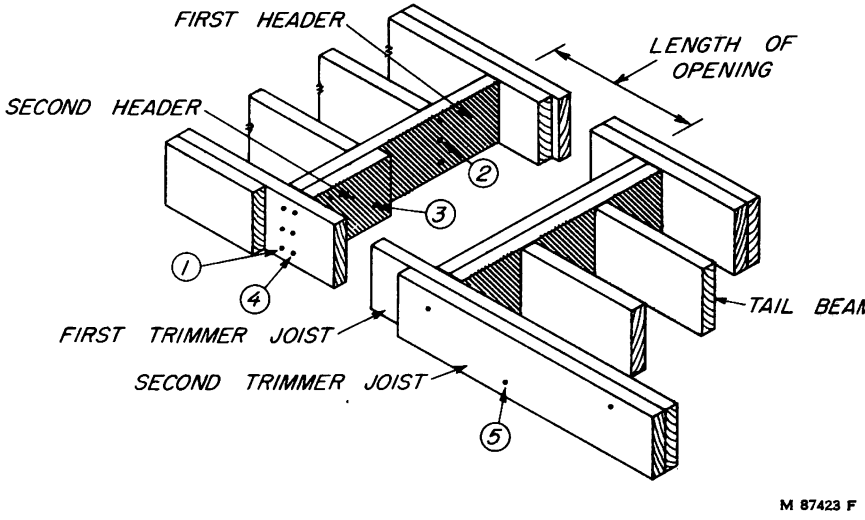

FIGURE 27.—Framing for floor openings. (1) First trimmer nailed to first header with three twentypenny nails; (2) first header nailed to tail beams with three twentypenny nails; (3) second header nailed to first header with sixteenpenny nails spaced 6 inches apart longitudinally; (4) first trimmer nailed to second header with three twentypenny nails; (5) second trimmer nailed to first trimmer with sixteenpenny nails spaced 12 inches apart longitudinally.

The joist spacing should not exceed 16 inches on center when finish flooring is laid parallel to the joists or where parquet finish flooring is used; nor exceed 24 inches on center when finish flooring at least 25/32 inch thick is at right angles to the joists.

Where balloon framing is used, blocking should be installed between ends of joists at the wall for nailing the ends of diagonal subfloor boards.

In areas where rain may occur during construction, square-edge boards should be laid with open joints for drainage. Tongue-and-groove boards should have holes at suitable intervals to allow runoff of rain water.

Plywood.—The following thickness and joist spacings are suggested by the Federal Housing Administration for plywood subfloor when used as a base for wood finish floors, linoleum, or composition, rubber, or ceramic tile:

Minimum thickness of five-ply subfloor (inch)	*Minimum thickness of finish flooring*	*Maximum joist spacing (inches)*
1/2 [1]	25/32-inch, wood strip if laid at right angles to joists	24
1/2 [1]	25/32-inch, wood strip if laid parallel to joists	20
1/2	25/32-inch, wood strip if laid at right angles to joists	20
1/2	Less than 25/32-inch, wood or other finish	[2] 16
5/8 [1]	Less than 25/32-inch, wood or other finish	[2] 20
3/4 [1]	Less than 25/32-inch, wood or other finish	[2] 24

[1] Installed with outer plies of subflooring at right angles to joists.
[2] Wood strip flooring, 25/32-inch thick or less, may be applied in either direction.

When used as base for parquet wood finish flooring less than 25/32-inch thick, linoleum, composition, rubber or ceramic tile, install solid blocking under all edges at right angles to floor joists.

Nail securely to joists and blocking with nails 6 inches on center on edges and 10 inches on center on intermediate framing members.

When used for leveling purposes over other subflooring, the minimum thickness is ¼-inch three-ply.

Floor Framing at Bay-Window Projections

The framing for a bay window or similar projection should be arranged so that the floor joists extend beyond the foundation wall to carry the loads (fig. 28). This extension should normally not exceed 2 feet. The joists forming each side of the bay and the header for the bay should be doubled. Nailing, in general, should conform to that for stair openings. The subflooring is carried to and sawed flush with the outer framing member. Roof joists should be carried by a header framed over the window opening in the projected part of the structure.

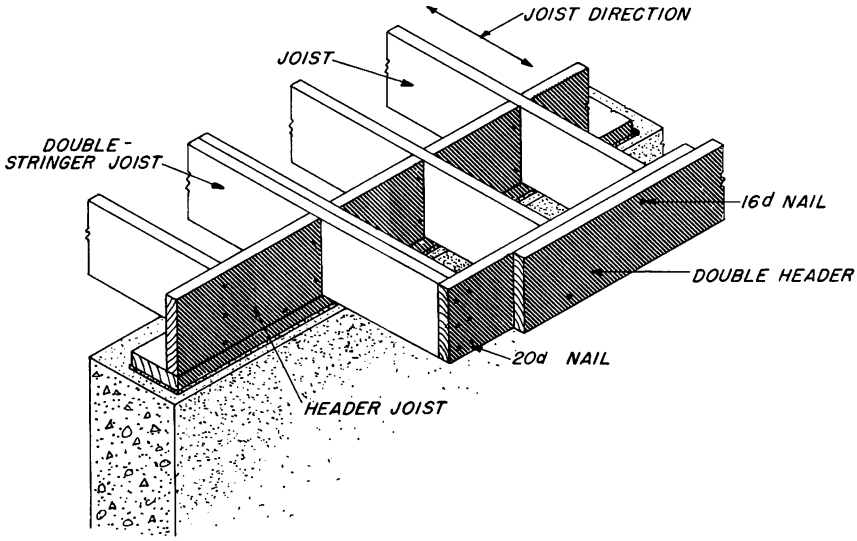

FIGURE 28.—Floor framing for bay-window extensions. The second header is nailed to the first header with sixteenpenny nails spaced 6 inches apart longitudinally. The first header is end-nailed to each member of the double-stringer joist with three twentypenny nails.

WALL FRAMING

The term "wall framing" includes primarily the vertical and horizontal members of exterior and interior walls that serve as a nailing base for wall-covering materials and support for upper floors, ceilings, and roof. The wall-framing members used in conventional construction are generally of 2- by 4-inch studs spaced 16 inches on center (*18*).

The requirements for wall-framing lumber are good stiffness, good nail-holding power, freedom from warp, and ease of working (*17*, *41*). Species and grades used for wall framing may, in general, follow those used for floor-framing materials, for example, Douglas-fir, the hemlocks, and southern yellow pine. Also commonly used for studs are the spruces, pines, and white fir. The No. 1 and No. 2 grades are those most often used.

All framing lumber should be of seasoned material (*57*). Lumber 2 inches and less in thickness should have a moisture content not to exceed 19 percent for conventional construction and 12 percent if shop fabricated.

Clear ceiling heights for the first and second floors should not be less than 7 feet 6 inches, but 8 feet is preferable. Second-floor ceiling heights should be not less than 7 feet 6 inches in the clear, except that portion under sloping ceilings. One-half of the floor area, however, should have at least a 7-foot 6-inch clearance.

As with floor construction, there are two general types of wall framing commonly used (*19*), platform construction and balloon-frame construction. The platform method is more generally used because of its simplicity. Balloon framing is usually employed where stucco or masonry is used as the exterior covering material.

Platform Construction

In platform construction, the subfloor extends to all outside edges of the building, and the walls and partitions are erected on and nailed to this flat surface (fig. 29).

A combination of platform construction for the first floor and balloon construction for the second floor may be used. This combination is often used in the gable ends of one-story houses when end wall studs carry through to the end rafters.

One method of framing that is widely used is the horizontal assembly (on the subfloor) of full wall sections. The sole or bottom plate and the top plate are nailed to the precut studs, and window and door headers are placed and nailed. Notches may also be cut in the studs for diagonal braces. The section is then raised, the soleplate is nailed to floor-framing members, and temporary braces are added (fig. 29).

Other wall sections are framed similarly and erected. After leveling and plumbing, the walls are braced and the assembled sections are nailed together at corners and intersections. The diagonals or other permanent bracing are then nailed in place. Figure 29 shows both a diagonal corner brace and a "K" brace, which is often used when windows are near the corners.

After the walls are erected, a second top plate is added that laps the under plate at corners and wall intersections. This gives an additional tie to the framed walls. The temporary bracing is left in place until the ceiling and the roof framing are completed and sheathing is applied to the outside walls.

Nailing details (*24*) that are in conformance with good practice for wall framing used with platform construction are given in figure 29. Sizes of common wire nails are shown in figure 30.

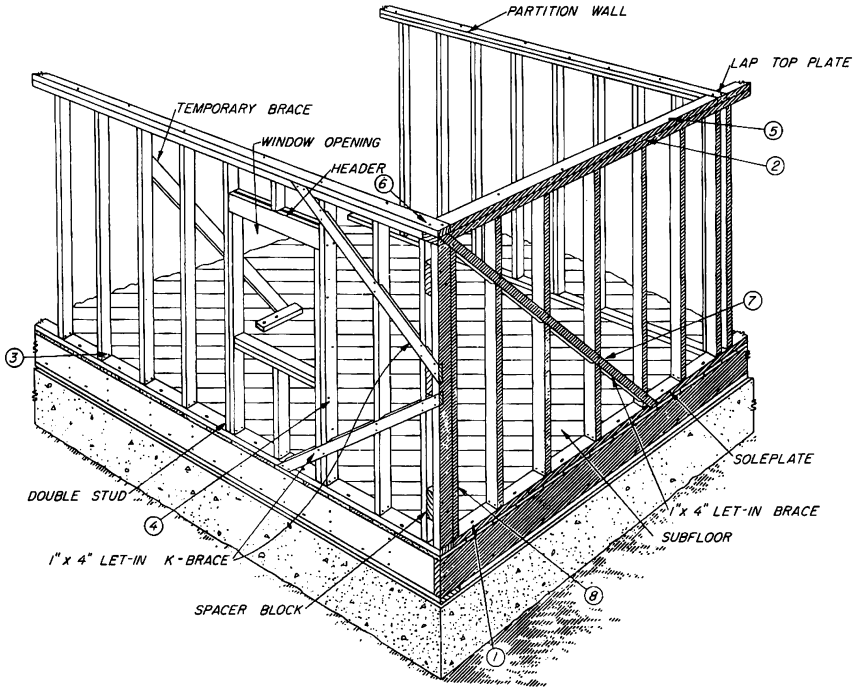

FIGURE 29.—Wall framing used with platform construction. (1) Soleplate nailed to joist or header joist with sixteenpenny nails 16 inches on center. (2) Top plate end-nailed to stud with two sixteenpenny nails. (3) Stud toenailed to soleplate with two eightpenny nails on each side. (4) Doubled studs nailed together with tenpenny nails 16 inches on center. (5) Top plates spiked together with tenpenny nails 16 inches on center. (6) Top plates, laps, and intersections nailed together with two sixteenpenny nails. (7) One-inch brace nailed to each stud and plate with two eightpenny nails. (8) Corner studs and multiple studs nailed with tenpenny nails 12 inches on center. Other joints should be nailed to provide proportional strength.

Balloon Construction

In balloon-frame construction both the wall studs and the joists rest on the anchored sill (fig. 31). Studs are toenailed to the sill with two eightpenny nails.

The second-floor or ceiling joists bear on a 1- by 4-inch ribbon that has been let into the studs. In addition, the joists are nailed with three tenpenny nails to the studs at these connections (fig. 31). The end joists parallel to the exterior on both the first and second floors are similarly nailed to the studs.

Other nailing details should conform in general to those described for platform construction.

In most areas building codes require that fire stops be used in balloon framing to prevent the spread of fire through the open wall passages. These fire stops are ordinarily of 2- by 4-inch blocking placed between the studs (fig. 31).

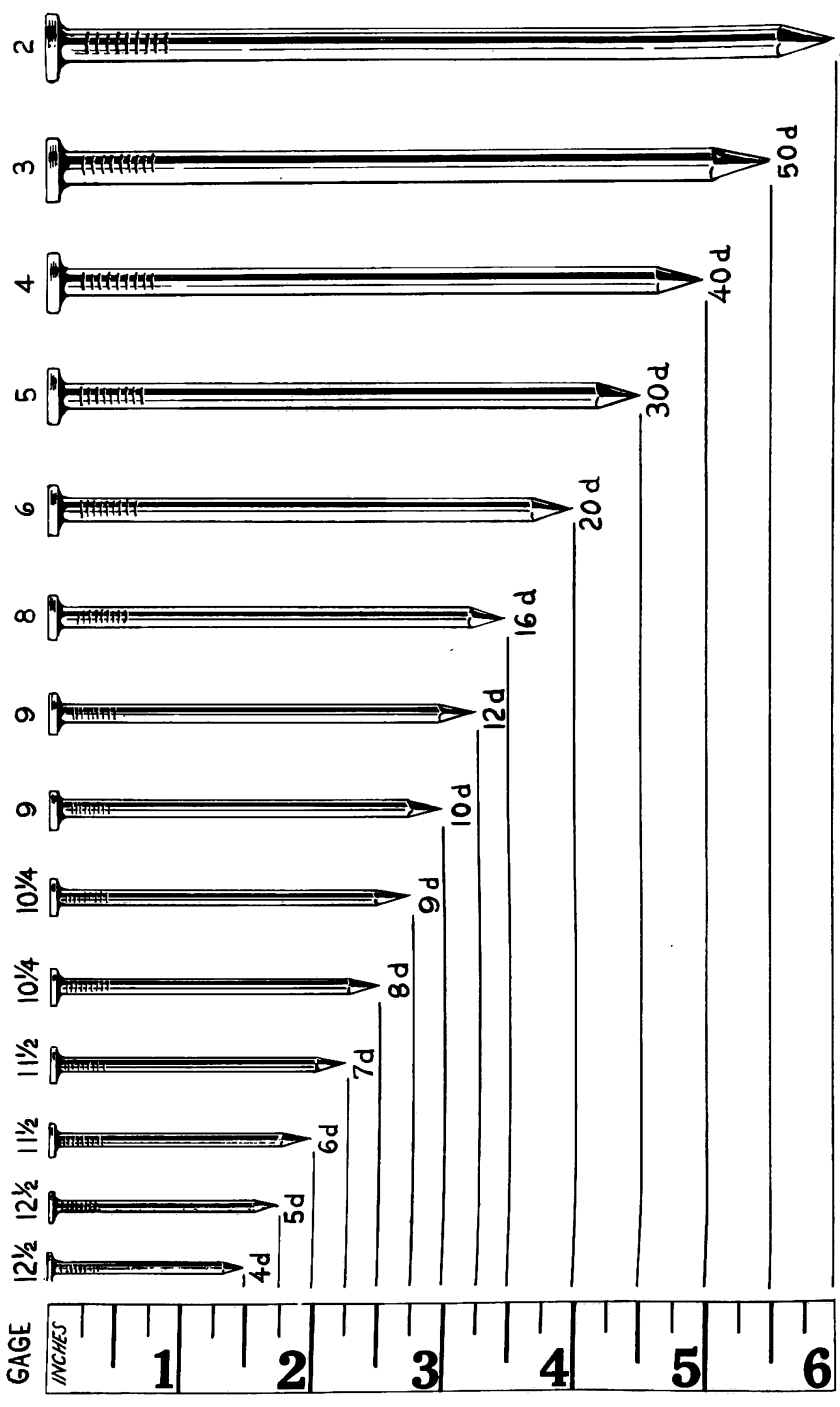

FIGURE 30.—Sizes of common wire nails.

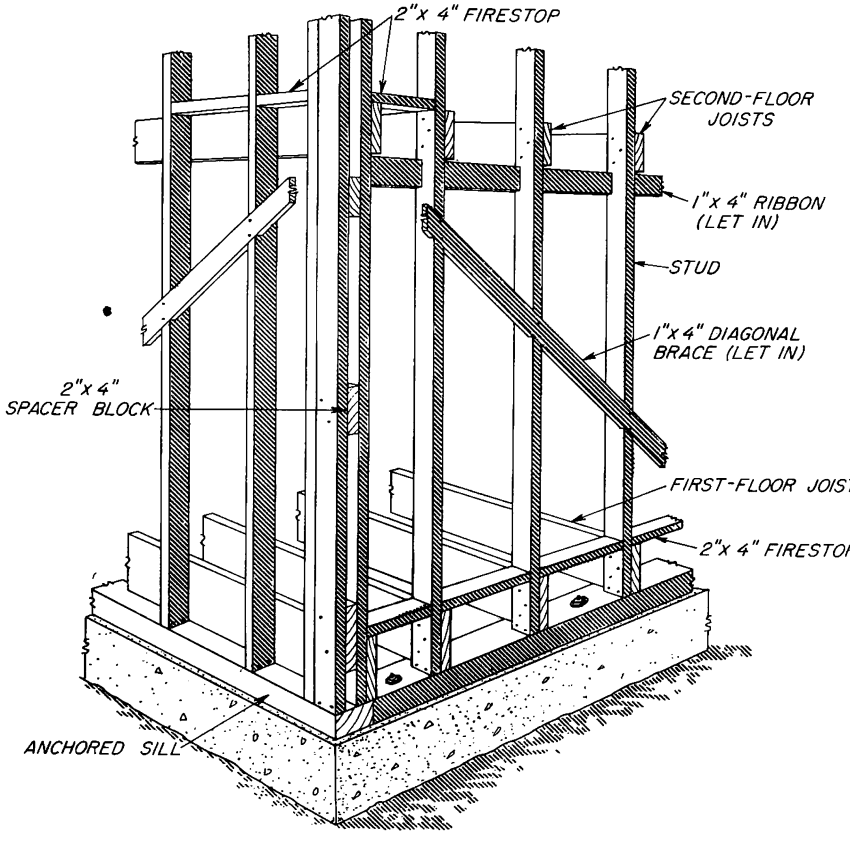

M 87434 F

FIGURE 31.—Wall framing used in balloon framing.

Window and Door Headers

The members used to span over window and door openings are called headers or lintels (fig. 29). As the span of the opening increases, it is necessary to increase the depth of these members in order to support the loads. A header is made up of two 2-inch members, sometimes spaced with 3/8-inch lath or wood strips, all of which are nailed together. They are supported at the ends by the inner studs of the double-stud joint at exterior walls and interior bearing walls. The following header depths are appropriate for the given openings in normal light frame construction:

Opening widths (for 16-inch stud spacing):	*Depth of headers (inches)*
2 stud spaces	6
3 stud spaces	8
4 or 5 stud spaces	10
6 stud spaces	12

For other than normal light frame construction, independent design may be necessary. Wider openings often require trussed headers, which may also need special design.

Exterior Corner and Wall-Intersection Details

At exterior corners and at interior wall intersections, it is good practice to use a multiple-stud post to secure a good tie between adjoining walls and to provide nailing bases for the interior wallboard or plaster lath.

The exterior corner (fig. 32, *A*) is made up of three 2-by-4 studs. Two 2-by-4 studs are nailed together with short 2- by 4-inch spacer

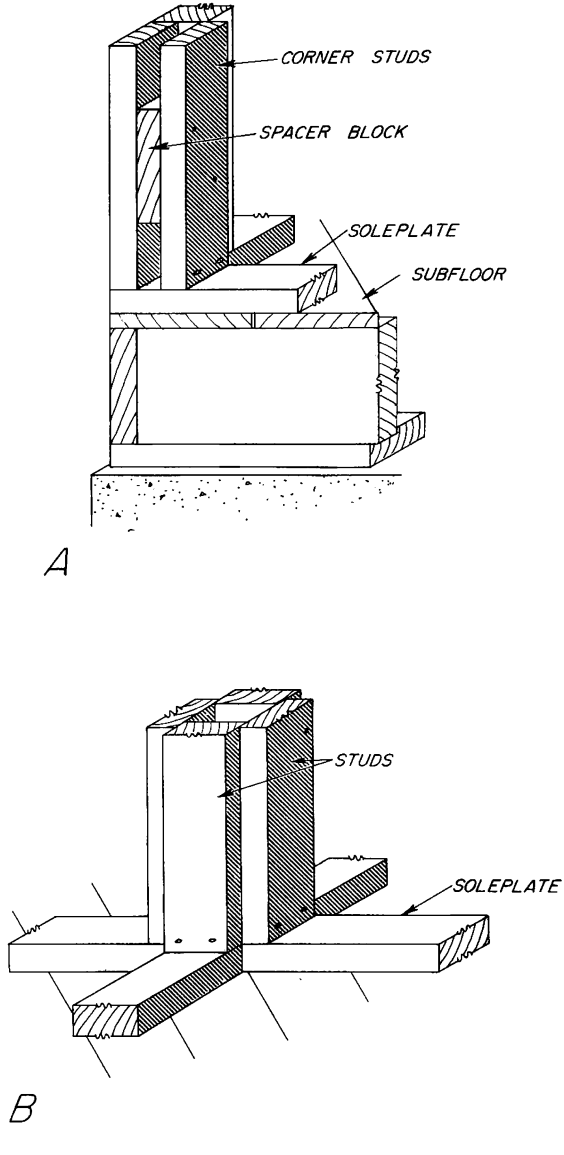

FIGURE 32.—*A*, Stud arrangement at exterior corner; *B*, stud arrangement at interior wall intersection.

blocks, and the third stud is nailed securely to the spaced studs with tenpenny nails staggered 12 inches apart (*24*).

Interior wall intersections (fig. 32, *B*) or wall crossings may be combined to form nailing surfaces at all interior corners. Nailing should be done with tenpenny nails staggered 12 inches apart.

End-Wall Framing

The end-wall framing at the sill and at the ceiling line are usually similar in platform construction. This similarity also applies to balloon construction.

In balloon framing, the end-wall studs are continuous, as shown in figure 33, *B*. The ends of the ceiling joists are nailed to the studs and

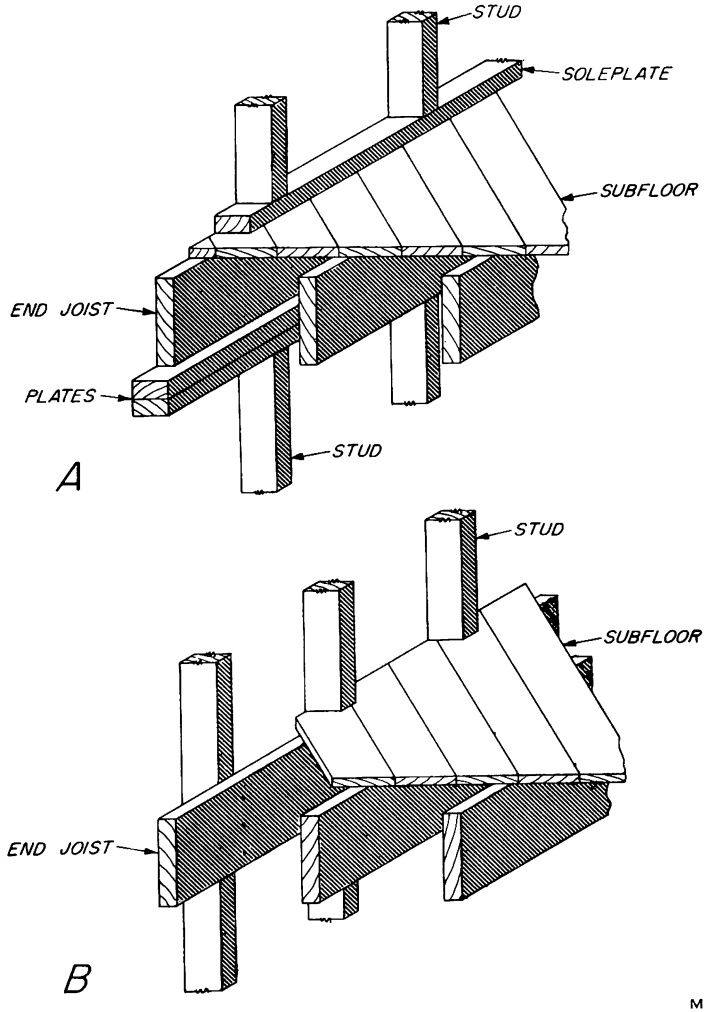

FIGURE 33.—End-wall framing. *A*, For platform construction; *B*, for balloon construction.

are supported by a let-in ribbon. Subfloor or attic flooring is then nailed to the joists. When joists are parallel to the length of the end wall, the ribbon is eliminated, because the sides of the end joists are nailed to the end-wall studs.

Lath Nailers

Lath nailers are horizontal or vertical members to which lath, gypsum boards, or other covering materials are nailed. These members are required at interior corners of the walls and at the juncture of the wall and ceiling.

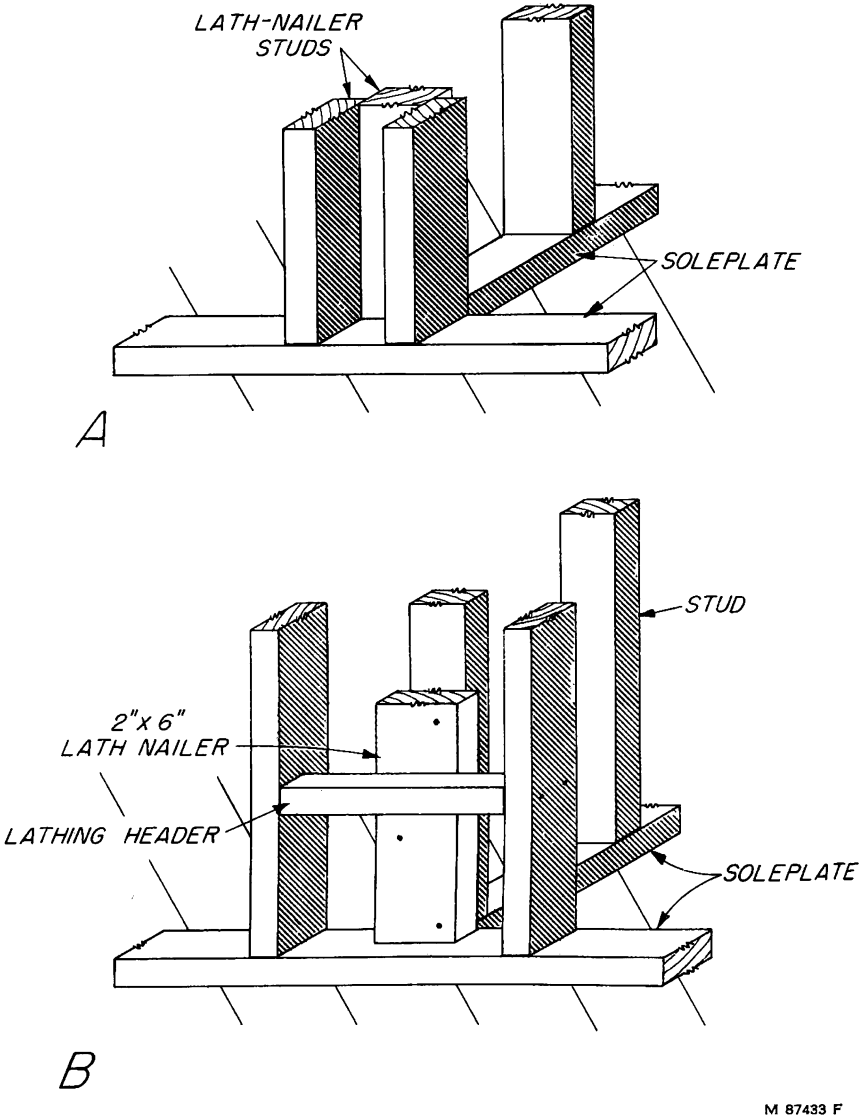

FIGURE 34.—Lath nailers at wall intersections. *A*, Formed by intersection of studs; *B*, by lathing board at wall intersections.

Vertical lath nailers may be composed of studs so arranged as to provide nailing surfaces (fig. 34, *A*). This construction also provides a good tie between walls.

Another vertical nailer construction consists of a 2- by 6-inch lathing board that is nailed to the stud of the intersecting wall (fig. 34, *B*). Lathing headers are used to back up the board. The header should be toenailed to the stud.

Doubling of the ceiling joists over the wallplates provides a nailing surface for interior finish material (fig. 35, *A*). Walls may be tied to the ceiling framing in this method by toenailing through the joists into the wallplates.

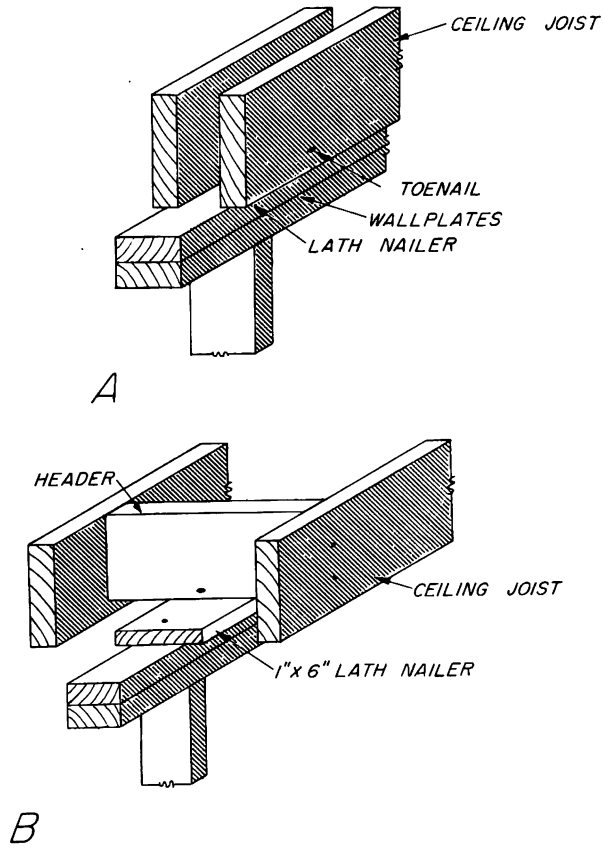

FIGURE 35.—Horizontal lath nailers. *A*, Nailers for plaster base formed by ceiling joists; *B*, provided by lathing board.

Another method of providing nailing surfaces at the ceiling line is similar to that used on walls. A 1- by 6-inch lathing board is nailed to the wall plates (fig. 35, *B*). Headers are used to back up this board, and the header, in turn, can be tied to the wall by toenailing into the wall plates.

CEILING AND ROOF FRAMING

Ceiling joists are used to support ceiling finishes. They often act as floor joists for second and attic floors, and they also act as ties between exterior walls and interior partitions. Since ceiling joists also serve as tension members to resist the thrust of the rafters of pitched roofs, they must be securely nailed or spliced if a sag in the ridge is to be avoided.

There are two basic types of roofs, flat and pitched. These two types have numerous variations. The so-called flat roof may actually have some slope for drainage. The slope is generally expressed as the number of inches of vertical rise in 12 inches of horizontal run, the rise being given first, as for instance 4 in 12. For purposes of definition, flat roofs might be classed as those having less than a 3-in-12 slope. This slope is the greatest for which a build-up covering is ordinarily allowed. Pitched roofs may vary in slope from 3 in 12 to 12 in 12 or more, depending on the roof covering and the use of the attic space.

All species of softwood framing lumber are acceptable for ceiling and roof framing, subject to maximum allowable spans for the particular species (*41*), grade, and use. Since all species are not equal in strength properties, larger sizes, as determined from the design, must be used for weaker species for a given span (*17*).

All framing lumber should be well seasoned. Lumber 2 inches thick and less should have a moisture content not to exceed 19 percent.

Flat Roofs

Roof joists for flat roofs are commonly laid level, with roof sheathing and roofing on top and with the underside utilized to support the ceiling. Sometimes a slight roof slope may be provided for roof drainage by tapering the joist or adding a cant strip to the top. The house design may call for an overhang of the roof beyond the wall or for a parapet wall carried above the roof. Insulation may be added just above the ceiling and the space above the insulation should be ventilated to remove hot air in the summer and to provide protection against condensation in the winter. Roofs of the type described generally require larger sized members than pitched-roof houses, but the total amount of framing lumber required is generally less. Figure 36, *A*, shows a simple type of flat roof in which roof joists are level and eliminate the need for ceiling joists.

In flat-roof construction where rafters also serve as ceiling joists, the size is established on the basis of both roof and ceiling loads. When overhang is involved on all sides of the house, lookout rafters are ordinarily used (fig. 37). A doubled header rafter is used, and lookout rafters are nailed to the header and toenailed to the wall-plate. The distance from the doubled header to the wall line is usually twice the overhang. Rafter ends may be finished with an outside header, which will serve as a nailing surface for trim.

In mild climates flat roofs or roofs with a low pitch may be built with 2-inch matched plank for roof sheathing supported on large beams spaced about 6 feet apart with the planking and beams exposed

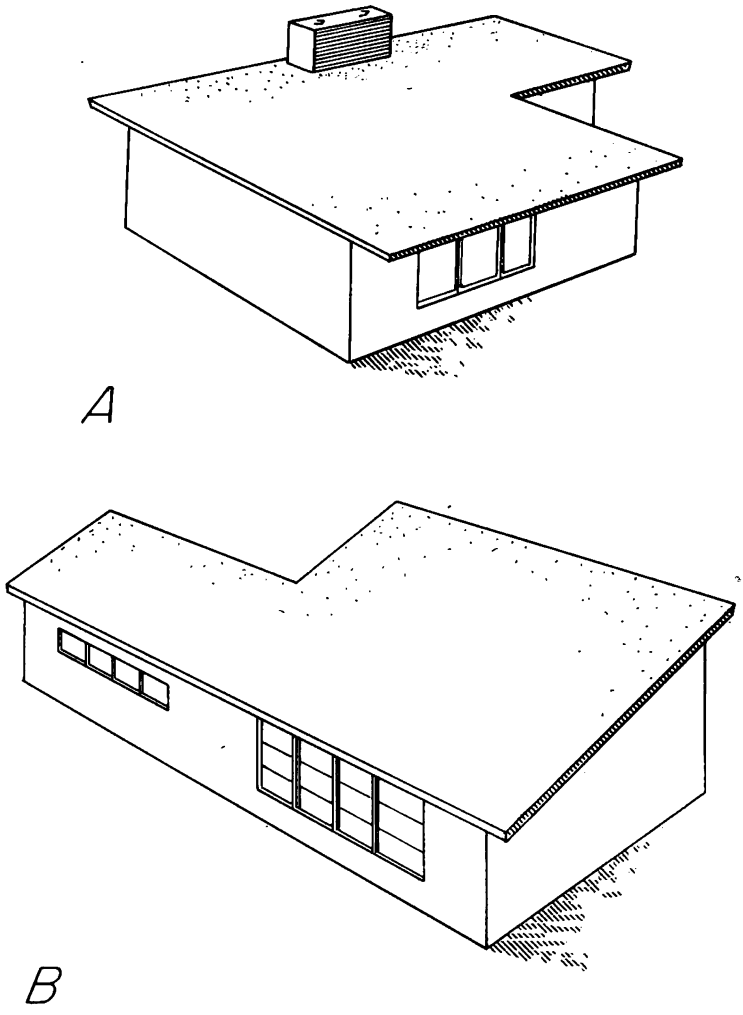

FIGURE 36.—Variations in flat-roof designs. *A*, Where rafters also serve as ceiling joists; *B*, shed roof.

on the underside. The exposed material may be dressed smooth and finished with varnish or otherwise decorated to suit. The roof is generally covered with a fiberboard insulation and this in turn with a composition roof.

Shed roofs as shown in figure 36, *B*, generally have the ceiling finish attached to the roof joist, and the ceiling takes the same pitch as the roof.

Pitched Roofs

Of the pitched roofs, the simple form is the gable roof (fig. 38, *A*). All rafters are cut to the same length and pattern, and erection is relatively simple. A variation of the gable roof may include dormers

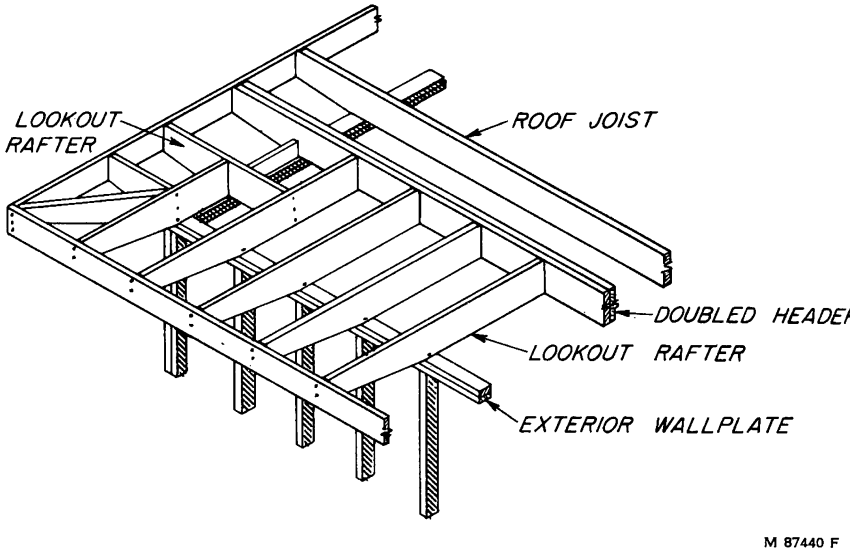

FIGURE 37.—Typical construction of flat roof with overhang.

for additional light and ventilation in second-floor rooms (fig. 38, *B*). The shed dormer provides greatest possibilities for light, floor space, and headroom but with some sacrifice in appearance (fig. 38, *B*).

The hip roof is shown in figure 38, *C*. Center rafters are tied to the ridge board, while hip rafters supply the support for the jack rafters (fig. 39, *C*). Cornice lines are carried around the perimeter of the building.

In normal pitched-roof construction, the ceiling joists are nailed in place after the interior and the exterior wall framing is complete. Rafters should not be erected until ceiling joists are fastened in place, as the thrust of the rafters will otherwise tend to push out the exterior walls.

Rafters are precut to length with the proper angle cut at the ridge and the eave and with notches provided for the wallplate (fig. 39, *A*). Rafters are erected in pairs. End studs are cut to fit and are nailed in place.

When roof spans are long and slopes are flat, it is common practice to use collar beams on each rafter. Steeper slopes and shorter spans may also require collar beams but only on every third rafter. Collar beams may be 1- by 6-inch material.

Good practices to be followed in the nailing of rafters, ceiling joists, and end studs are shown in figure 39 (*24*).

Valleys

The valley is the internal angle formed by the junction of two sloping sides of a roof. The key member of valley construction is the valley rafter. In the intersection of two equal-size roof sections the valley rafter is doubled (fig. 40) to carry the roof load and is 2 inches

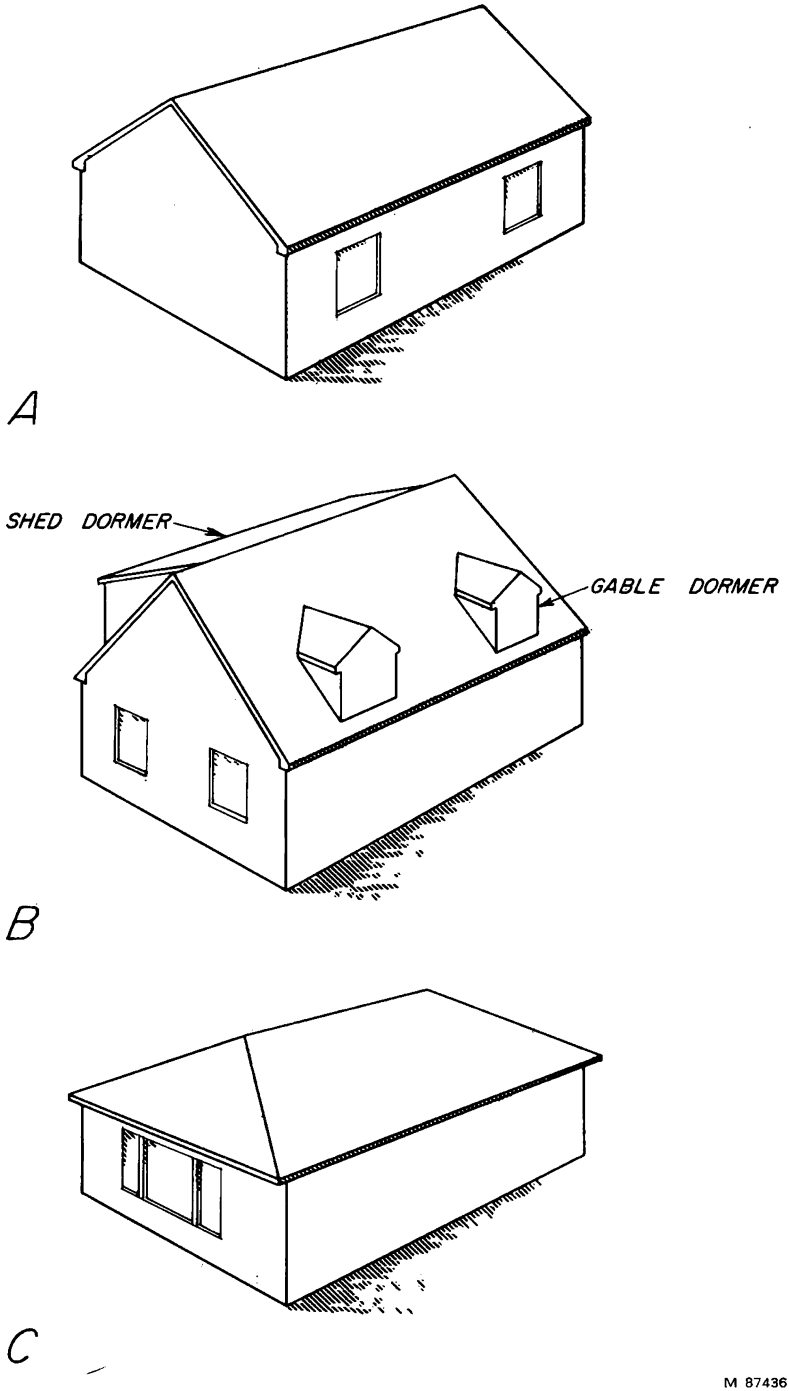

FIGURE 38.—Types of pitched roofs. *A*, Gable; *B*, gable with dormers; *C*, hip.

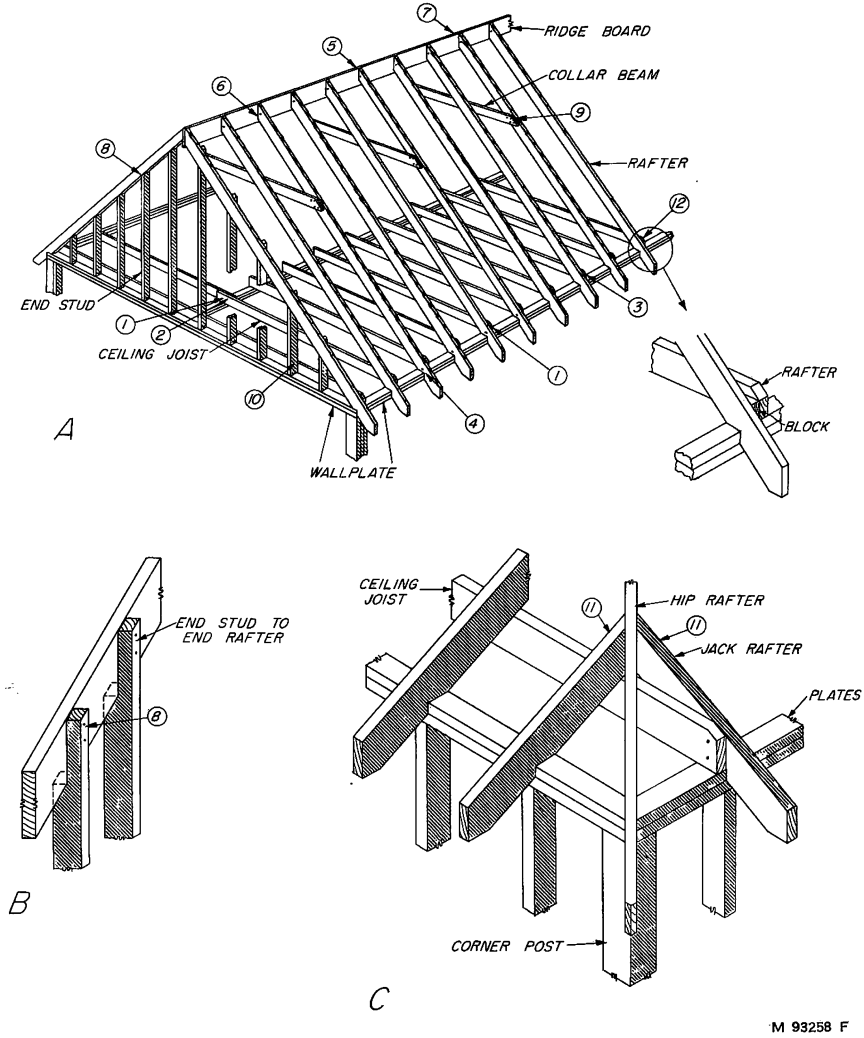

FIGURE 39—Ceiling and roof framing. *A*, Roof-frame nailing; *B*, end-stud connection to rafter; *C*, hip-rafter connection. (1) Ceiling joists toenailed to wallplate with two tenpenny nails; (2) ceiling joists lapped over center partition and nailed to each other on each side with two tenpenny nails; (3) ceiling joists nailed to adjacent rafter with two tenpenny nails; (4) rafter toenailed to wallplate with two tenpenny nails; (5) one of each pair of rafters end-nailed to 1-inch ridge with two tenpenny nails; (6) other rafter of pair toenailed on each side to ridgepole and to opposite rafter with one tenpenny nail; (7) rafter end-nailed at top to opposite rafter of pair with one tenpenny nail; (8) notched end stud nailed to end rafter (*A*, *B*) with two tenpenny nails; (9) collar beam nailed to each rafter with four eightpenny nails; (10) end stud toenailed on each side to wallplate with two eightpenny nails; (11) jack rafter nailed to hip rafter (*C*) with three tenpenny nails. Other joints should be nailed to provide proportional strength. When ceiling joists are lapped at the bearing partition (12), blocking is used as a separator between roof, rafter, and ceiling joists.

deeper than the common rafter to provide full contact with jack rafters. Jack rafters are nailed to the ridge and are toenailed to the valley rafter with three tenpenny nails (fig. 40).

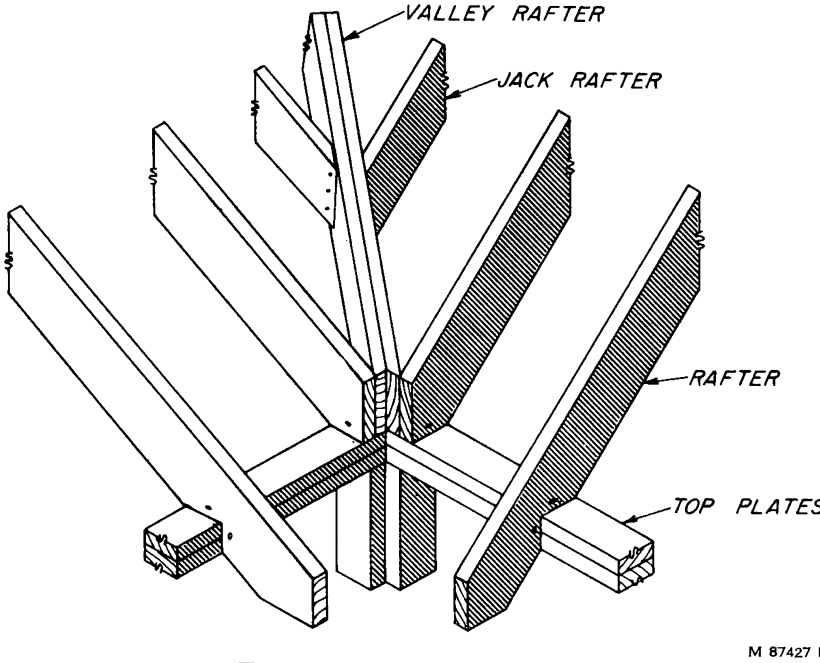

FIGURE 40.—Framing at a valley.

Dormers

In construction of small gable dormers the rafters at each side are doubled and the side studs and valley rafter rest on these members (fig. 41). The valley rafter is also tied to the roof framing at the roof by means of a header. Methods of fastening at wallplates should conform to those previously described. Where future expansion is contemplated or additional rooms may be built in an attic, consideration should be given to framing future dormers when the house is built.

Overhangs

In two-story houses the design often involves a projection or overhang of the second floor for the purpose of architectural effect, to accommodate brick veneer on the first floor, or for other reasons. This overhang may vary from 2 to 15 inches or more. The overhang should ordinarily extend on that side of the house where joist extensions can support the wall framing (fig. 42).

When the overhang parallels the second-floor joists, a doubled header joist is used and lookout joists extend over the wall line similar to that detail shown in figure 37. This header should ordinarily be located back from the wall face a distance of twice the overhang.

304696 O—55——4

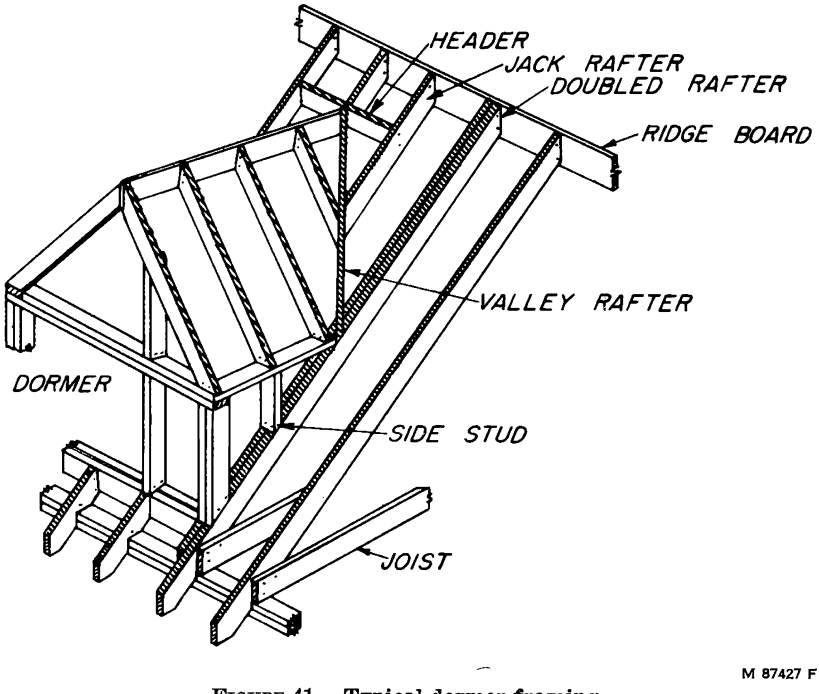

FIGURE 41.—Typical dormer framing.

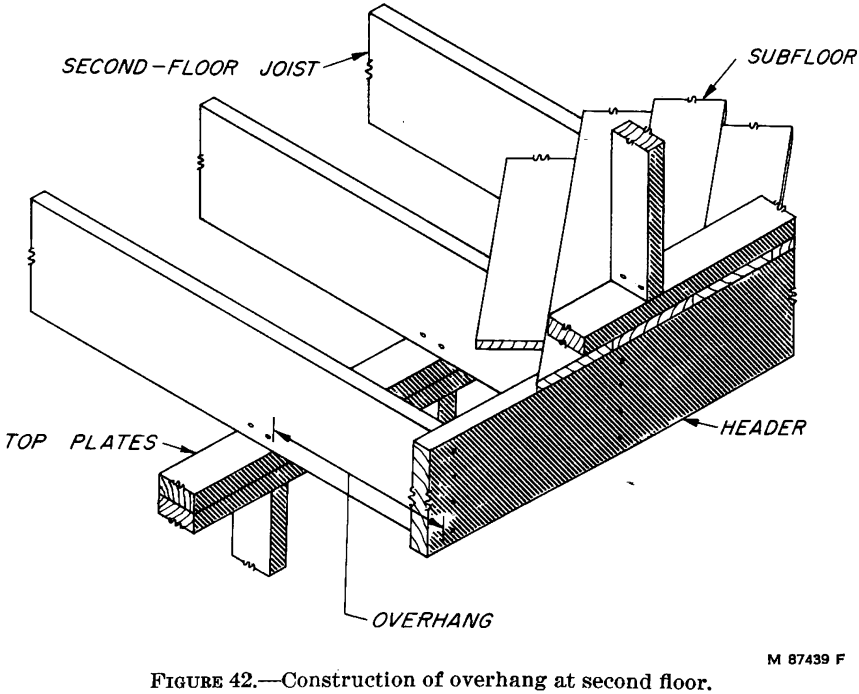

FIGURE 42.—Construction of overhang at second floor.

Lightweight Roof Trusses

Experience has shown that lightweight roof trusses (*63*) are suitable for houses. They save in material and can be quickly put in place, so that the house can be rapidly enclosed. If the trusses are designed to span from exterior wall to exterior wall and no bearing partitions are required, the entire house becomes one large workroom during erection. There is increased flexibility for interior planning, as partitions can be placed without regard to structural requirements.

Trusses consist essentially of top and bottom chords connected by suitable diagonal and vertical members (*63*). The truss members may be joined with mechanical fastenings such as nails, bolts, or connectors (*46*). Figure 43 illustrates one type of lightweight truss. Such trusses are usually spaced 2 feet on center. Trusses should be designed in accordance with sound engineering practice. Trusses may be nailed to the top plates of the exterior walls or fastened in place with metal straps or clips.

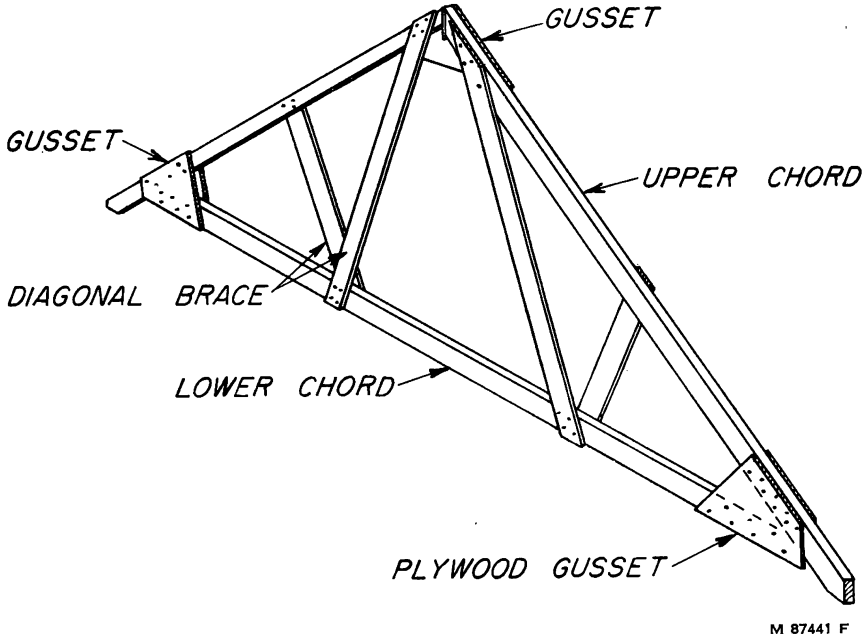

FIGURE 43.—Typical roof truss.

WALL SHEATHING

Wall sheathing (*18*) is the outside covering used over the wall framework. It is nailed directly to the studs. It forms a flat base upon which the exterior finish is applied. Sheathing adds both strength and insulation to the house. It is sometimes eliminated from houses built in the mild climates of the South and the West. Diagonal corner bracing should be installed to provide stiffness and rigidity, except

where the type of sheathing used provides adequate bracing. There are four types of sheathing commonly used in present-day construction: wood, plywood, fiberboard, and gypsum.

Types of Sheathing

Wood sheathing.—Wood sheathing is usually of nominal 1-inch stock in a shiplap, a tongue-and-groove, or a square-edge pattern (fig. 44). The requirements (*41*) for wood sheathing are easy working, easy nailing, and moderate shrinkage. No. 3 Common is the minimum grade for wall sheathing for such species as Douglas-fir, Sitka spruce, southern cypress, redwood, western hemlock, tamarack, and southern yellow pine. No. 4 Common is the minimum grade for sheathing for white fir, western larch, spruce (except Sitka), ponderosa pine, sugar pine, Idaho white pine, northern white pine, and Norway pine. Widths commonly used are 6 and 8 inches, although wider widths are sometimes used with additional nailing (*24*). Some manufacturers produce random-length side- and end-matched stock for sheathing.

Plywood sheathing.—Plywood may also be used for sheathing. It is normally used in 4- by 8-foot sheets, applied vertically. This method of sheathing eliminates the need for diagonal corner bracing; but, as in the case of all sheathing materials, it should always be well nailed (*24*). The type generally used, called "sheathing grade," is unsanded and may contain knots. The minimum thickness for 16-inch stud spacing is $^5/_{16}$ inch and for 24-inch stud spacing is $^3/_8$ inch.

Fiberboard sheathing.—Fiberboard sheathing is commonly used in 2- by 8-foot sheets in dressed and matched or in shiplap edge and is applied horizontally (fig. 44, *C*, *D*). Fiberboard sheathing may also be used in sheets 4 feet wide and 8 to 12 feet long, which are applied vertically. Thickness is normally $^{25}/_{32}$ inch, although $^1/_2$-inch material may be used where the stud spacing does not exceed 16 inches. It is generally coated or impregnated with an asphalt material, which increases water resistance.

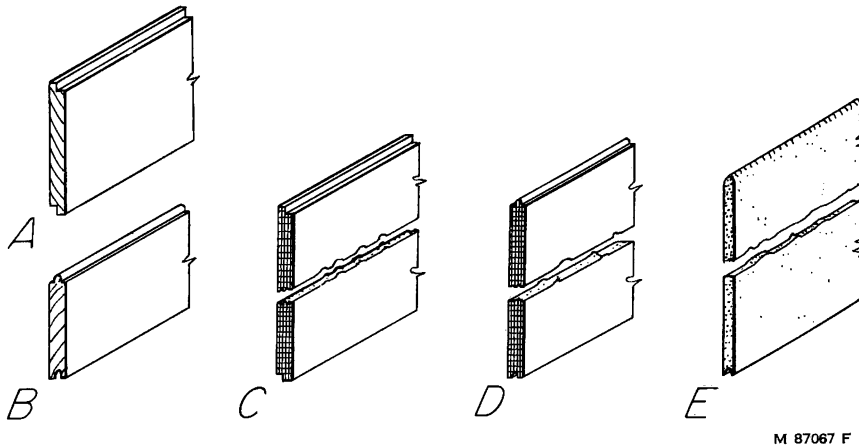

FIGURE 44.—Types of sheathing. *A*, Wood shiplap; *B*, wood tongue-and-groove; *C*, fiberboard shiplap; *D*, fiberboard tongue-and-groove; *E*, gypsum.

Gypsum sheathing.—Gypsum sheathing is ½ inch thick, 2 by 8 feet in size, and is applied horizontally for stud spacing of 24 inches or less. It is composed of a treated gypsum filler faced on two sides with lightweight paper (fig. 44, *E*). Often one edge is grooved, while the other has a matching V edge. This makes application easier and adds a small amount of tie between sheets.

Corner Bracing

The purpose of corner bracing is to provide rigidity to the structure and to resist the racking forces of wind. Corner bracing should be used at all external corners of houses where the type of sheathing used does not provide the bracing required. Types of sheathing that provide adequate bracing are as follows: Wood sheathing when applied diagonally; plywood, sheathing grade, when applied vertically in sheets 4 feet wide by 8 or more feet high and where attached with sixpenny nails, spaced not more than 6 inches apart on all edges and not more than 12 inches at intermediate supports; and wallboard meeting requirements of the Federal Housing Administration (*16*).

Where corner bracing is required, use 1- by 4-inch members let into the outside face of the studs and set at an angle of 45° from the bottom of the soleplate to the top of the wallplate or corner stud. Where openings near the corners interfere with full-length bracing, use knee braces or K-braces (fig. 29) extending from the corner post to the soleplate and from the corner post to the top plate. Such braces should extend across at least three stud spaces. Where there are openings at the corner, the braces may be set back from the corner and full-length or K-braces may be used.

Installation of Sheathing

Wood sheathing.—The minimum thickness of wood sheathing is nominal 1 inch (25/32); and the widths commonly used are 6, 8, 10, and 12 inches. The 6- and 8-inch widths will have less shrinkage than greater widths, so that smaller openings will occur between boards. The boards should be nailed at each stud crossing with 2 nails for the 6- and 8-inch widths, and 3 nails for 10-inch and 12-inch widths. Joints should be placed over the center of studs (fig. 45, *A*) unless end-matched (tongue-and-groove) boards are used. If end-matched boards are used, no two adjoining board should have end joints over the same stud space and each board should bear on at least two studs.

There are two methods of installing sheathing at the foundation sill. Figure 45, *B*, shows the sheathing carried over the floor framing. Figure 45, *C*, shows the sheathing started at the subfloor. The detail shown in figure 45, *B*, is preferred because it provides some tie of the wall frame to the sill plate.

Horizontal sheathing (fig. 45, *A*) is commonly used because it is easy to apply and there is less lumber waste than with diagonal sheathing. Horizontal sheathing, however, requires diagonal corner bracing for wall framework.

Diagonal sheathing (fig. 45, *A*) should be applied at a 45° angle. This method of sheathing adds greatly to the rigidity of the wall and eliminates the need for corner bracing. It also provides an excellent

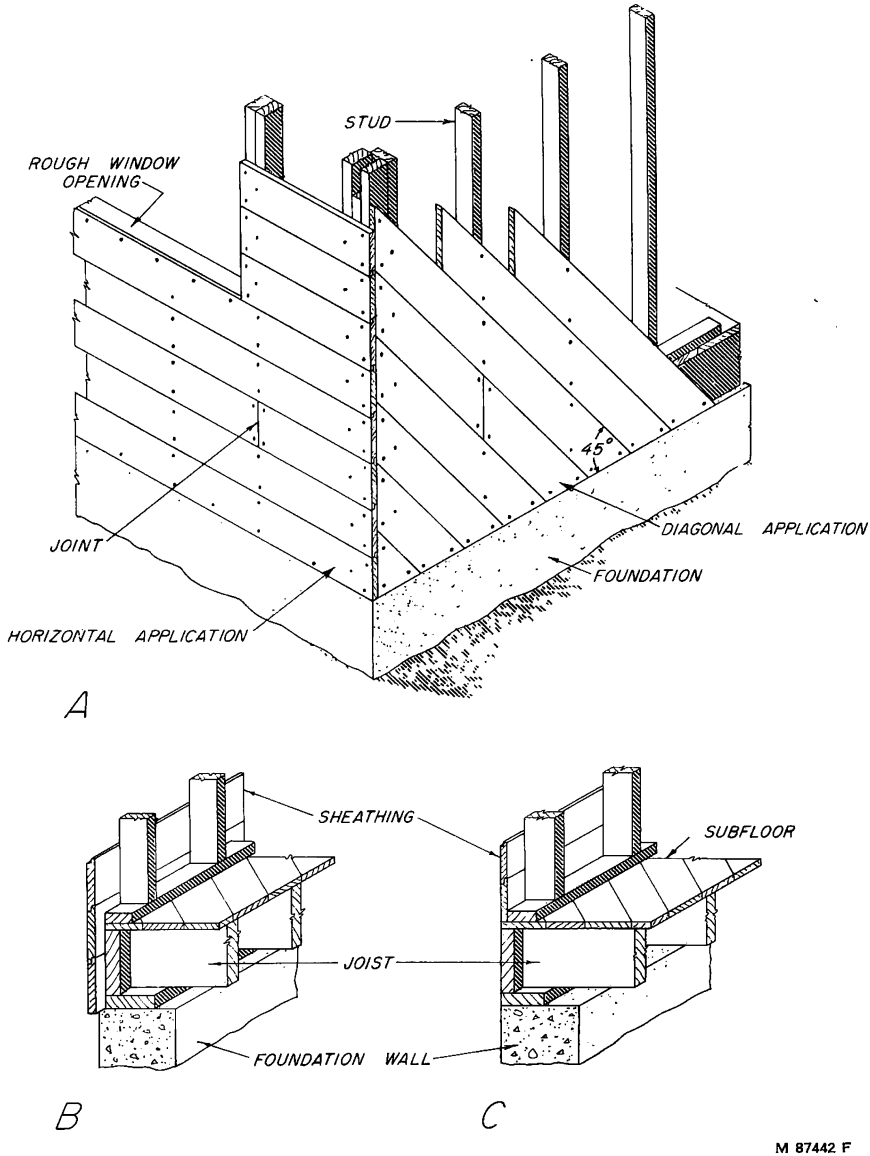

FIGURE 45.—Wood sheathing application. *A*, Horizontal and diagonal; *B*, started at foundation wall; *C*, started at subfloor.

tie to the sill plate when used as shown in figure 45, *B*. There is more lumber waste than with horizontal sheathing because of angle cuts, and the application is somewhat more difficult. End joints should be made over studs.

Fiberboard and gypsum sheathing in 2- by 8-foot sheets.—The most popular size of fiberboard and gypsum sheathing is 2 by 8 feet. This size is applied horizontally with the vertical joints staggered (fig. 46).

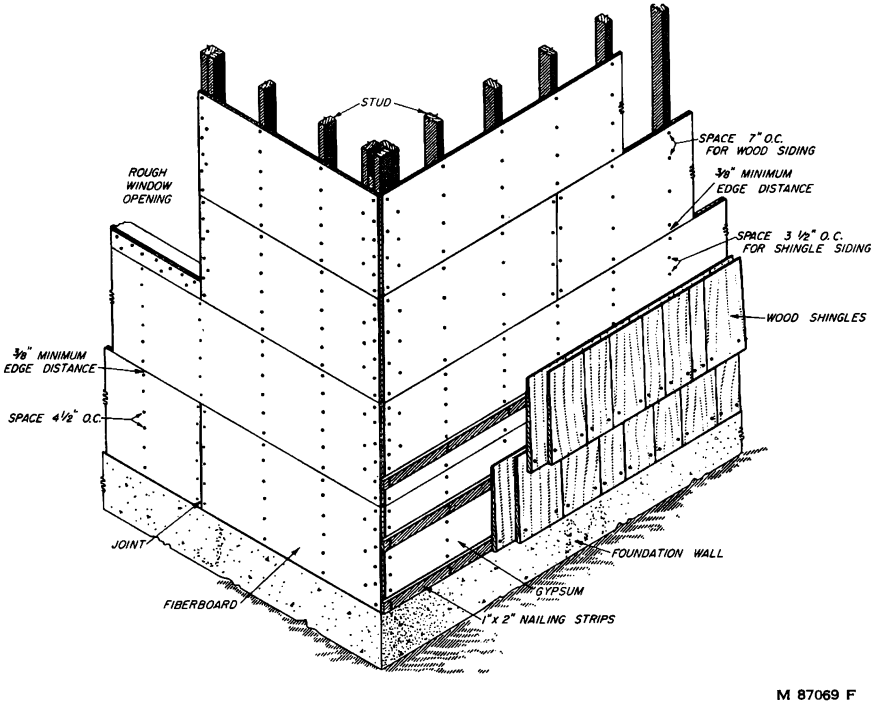

FIGURE 46.—Horizontal application of 2- by 8-foot sheets of fiberboard and gypsum sheathing.

Fiberboard sheathing (fig. 46) should be nailed (*24*) at all studs with 2-inch galvanized roofing nails or other types of noncorrosive nails. Space nails 4½ inches on center or 6 nails in the 2-foot height. Nails should be kept at least ⅜ inch from the edge of the sheet.

Gypsum sheathing (fig. 46) is nailed with 1¾- or 2-inch galvanized roofing nails. When siding or other similar material is used for exterior finish in which siding nails carry through into the studs, the roofing nails may be spaced 7 inches on center or with 4 nails in the 2-foot height. Otherwise nails should be spaced 3½ inches on center (7 nails in 2-foot height).

When exterior coverage is wood shingles, the fiberboard or gypsum sheathing is usually stripped with 1- by 2-inch horizontal strips well nailed to the studs. Strips are spaced to conform to shingle exposure, and shingles are secured to the strips (fig. 46).

When asbestos shingles are used over fiberboard or gypsum sheathing, strips are applied directly to the studs. Sheathing is nailed over the strips so that the asbestos shingles, which require a flat bearing surface to prevent breakage, can be fastened to the strips.

Fiberboard and plywood sheathing in 4- by 8-foot sheets.—Vertical application of fiberboard (fig. 47) in 4- by 8-foot sheets is usually recommended by the manufacturer because perimeter nailing is possible. It should be nailed with 2-inch galvanized roofing nails spaced 3 inches on center at the edges and 6 inches on center at intermediate framing members. The minimum edge distance is ⅜ inch. The manufacturer

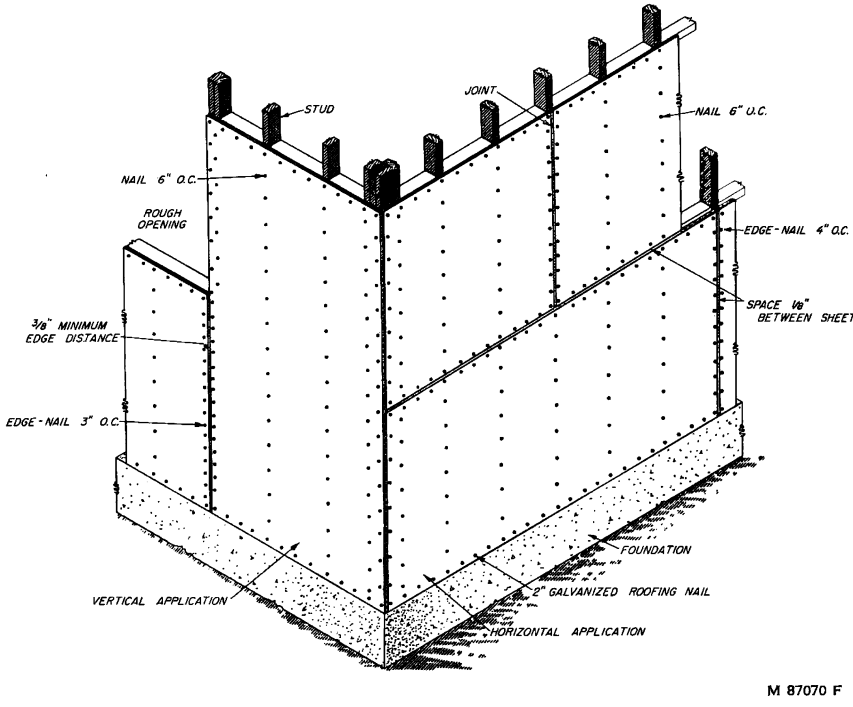

FIGURE 47.—Vertical and horizontal application of 4- by 8-foot fiberboard sheathing.

also recommends spacing the sheets 1/8 inch apart. Joints should come on the centerline of framing members.

Plywood used for sheathing is usually in 4 by 8 sheets and should be a minimum of 5/16 inch in thickness for studs spaced 16 inches and 3/8 inch in thickness for studs spaced 24 inches. Six-penny nails should be used and spaced not more than 6 inches apart for edge members and 12 inches for intermediate members. Plywood is usually applied vertically, and then perimeter nailing is possible and no additional blocking is necessary. When the 8-foot dimension is horizontal, blocking is desirable at the horizontal joint between studs as a base to which to nail finish. When exterior coverage requires nailing between studs (as with wood shingles), the plywood should be 3/8 inch in thickness. Wood shingles must be nailed to stripping when 5/16-inch plywood is used for sheathing. If barbed nails are used for attaching the shingles, the stripping may be omitted.

Sheathing paper.—Sheathing paper should be water-resistant but not vapor-resistant. It should be applied horizontally, starting at the bottom of the wall. Succeeding layers should lap about 4 inches and lap over strips around openings. Strips about 6 inches wide should be installed behind all exterior trim of exterior openings.

Sheathing paper should be used behind exterior stucco finish and also over wood sheathing. For other than stucco finish it may be omitted when the sheathing is (*a*) plywood equal to interior or exterior type conforming to Commercial Standard CS 45–48, or (*b*) fiberboard sheathing that has been factory treated to render it water

resistant, conforming to Commercial Standard CS 42–49, or (*c*) core-treated water-repellent gypsum sheathing board conforming to proposed ASTM Specification C 79–50, or (*d*) non-core-treated gypsum sheathing that has been factory treated to render the board moisture resistant.

ROOF SHEATHING

Roof sheathing (*18*) is the coverage over the rafters or roof joists and usually consists of nominal 1-inch boards for both flat and pitched roofs. Where flat roofs are to be used for a deck or an airing balcony, thicker boards or double sheathing may be required, especially where joists are spaced more than 16 inches on center or where diagonal sheathing is used. Sheathing provides a nailing base for roof covering and gives rigidity and strength to the roof framing. Where greater strength and resistance to high winds are desired, the roof boards are nailed diagonally to the rafters rather than horizontally. Plywood, which is sometimes used for roof sheathing, also adds rigidity and bracing to the roof structure.

Roof sheathing boards are generally No. 3 Common or better, and species used are the pines, Douglas-fir, redwood, the hemlocks, western larch, the firs, and the spruces (*41*). It is important that thoroughly seasoned material be used with asphalt shingles. Unseasoned wood will dry out and will shrink in width. This shrinkage will cause buckling or lifts of the shingles, which may extend along the full length of the board.

Installation of Roof Sheathing

Closed sheathing installation.—Roof boards used for sheathing under materials that require solid and continuous support, such as asphalt shingles, composition roofing, and metal-sheet roofing, must be laid closed (fig. 48, *A*). Closed roof sheathing may also be used for wood shingles. Closed roof boards should preferably be of dressed and matched or shiplap material, 8 inches in width and 1-inch nominal thickness. Where roof boards are reused from concrete formwork, they should be thoroughly cleaned and redried before use.

The boards should be nailed with two eightpenny nails (*24*) at each bearing, and joints should be made over the center of the rafter (fig. 48, *A*). To obtain good framing anchorage, it is desirable to use long boards, particularly at roof ends.

Where end-matched boards are used (fig. 48, *B*), the joints may be made between rafters, but in no case should the joints of adjoining boards be made over the same rafter space and each board should bear on at least two rafters.

Spaced sheathing installation.—When wood shingles are applied to nailing strips, which may be 1- by 3- or 1- by 4-inch strips, they should be spaced the same distance apart on centers as the shingles are to be laid to the weather (fig. 48, *A*). This form of construction is commonly used, particularly in damp climates.

Plywood Roof Sheathing

When plywood roof sheathing is used, it should be laid with the face grain perpendicular to the rafters (fig. 49). Sheathing-grade (unsanded) plywood is ordinarily used. Joints should be made over the center of the rafters.

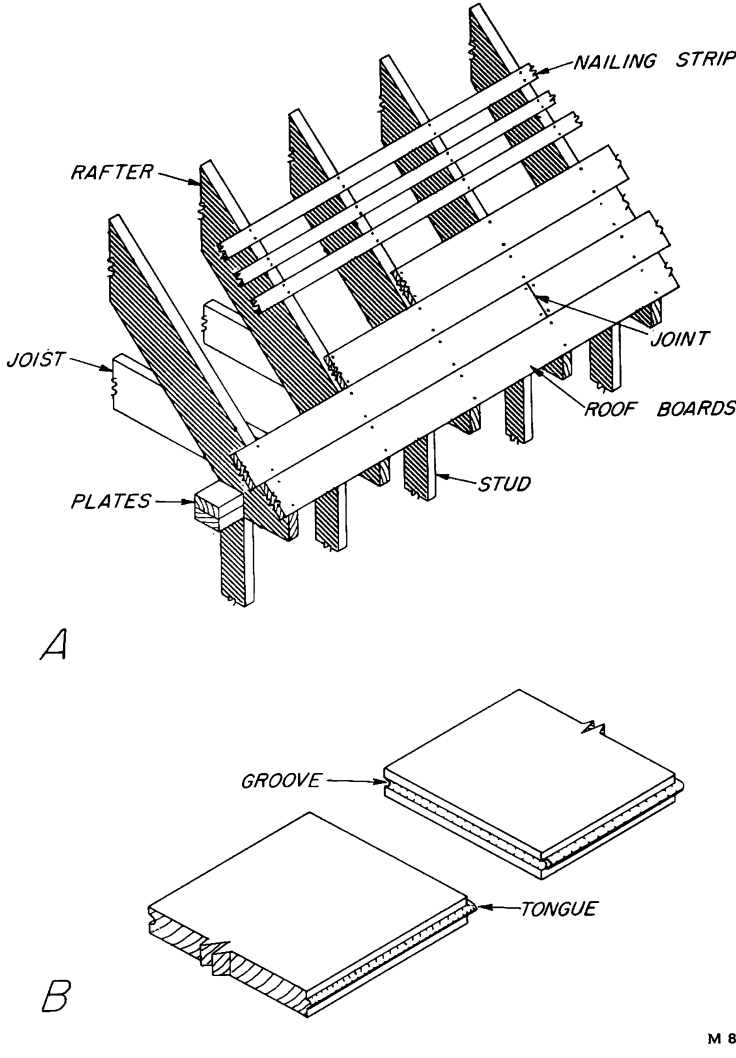

FIGURE 48.—Installation of wood board roof sheathing, *A*, Closed and spaced; *B*, end-matched.

For wood or asphalt shingles with a rafter spacing of 16 inches, 5/16-inch plywood is recommended; for a 24-inch span 3/8-inch plywood should be used. For slate, tile, and asbestos-cement shingles, 1/2-inch plywood is recommended for 16-inch rafter spacing and 5/8-inch plywood for 24-inch spacing. Sheathing should be nailed to rafters with sixpenny nails, spaced 6 inches apart on edges and 12 inches elsewhere. If wood shingles are used and the plywood sheathing is less than 1/2-inch thick, 1- by 2-inch nailing strips, spaced according to shingle exposure, should be nailed to the plywood. Plywood roof sheathing, unless of the exterior type, should have no surface or edge exposed to the weather.

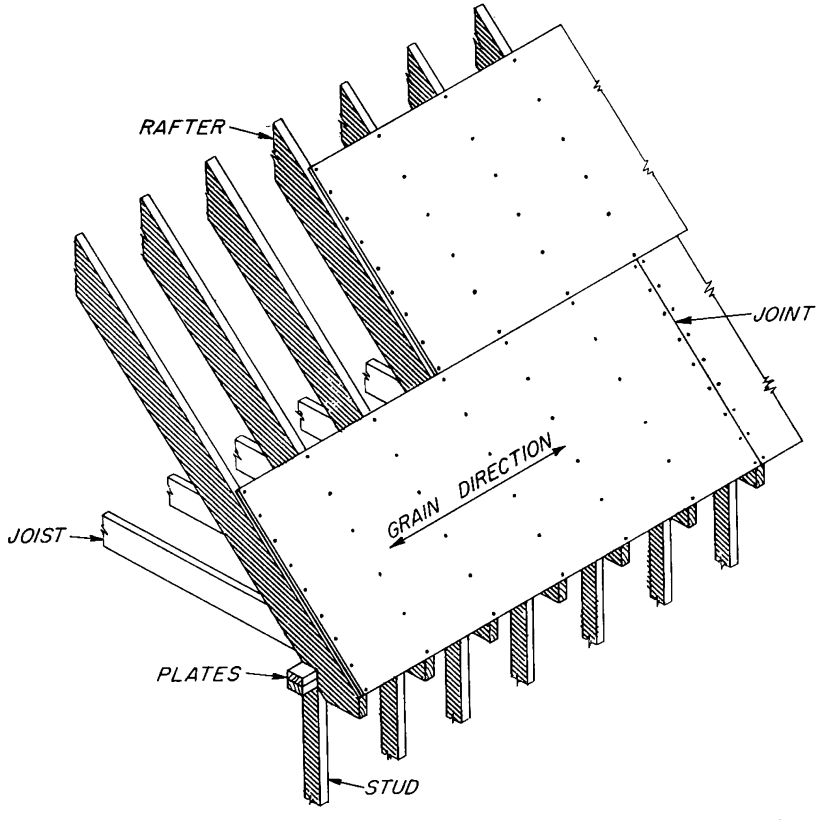

M 87060 F

FIGURE 49.—Application of plywood roof sheathing.

Wood Board Roof Sheathing Details at Ends of Roof

Methods of laying wood board roof sheathing at the ends of the roof are shown in figure 50. Where the gable ends of the roof are to have little or no extension at the rake section (gable end) other than molding and other trim, the roof boards are usually sawed flush with the outer face of the side-wall sheathing (fig. 50). Cuts should be made even, so that trim and moldings can be easily installed (see Exterior Trim and Millwork, page 56).

Roof sheathing that projects beyond end walls should span not less than three rafter spaces to insure proper anchorage to the rafters and to prevent sagging (fig. 50). In general, it is desirable to use the longest boards at overhangs to secure good anchorage.

Wood Board Roof Sheathing Details at Chimney Openings

Where chimney openings occur in the roof structure (fig. 51), the roof boards should have a clearance of ½ inch from the finished masonry on all sides (fig. 51, *section A–A*). Framing members should

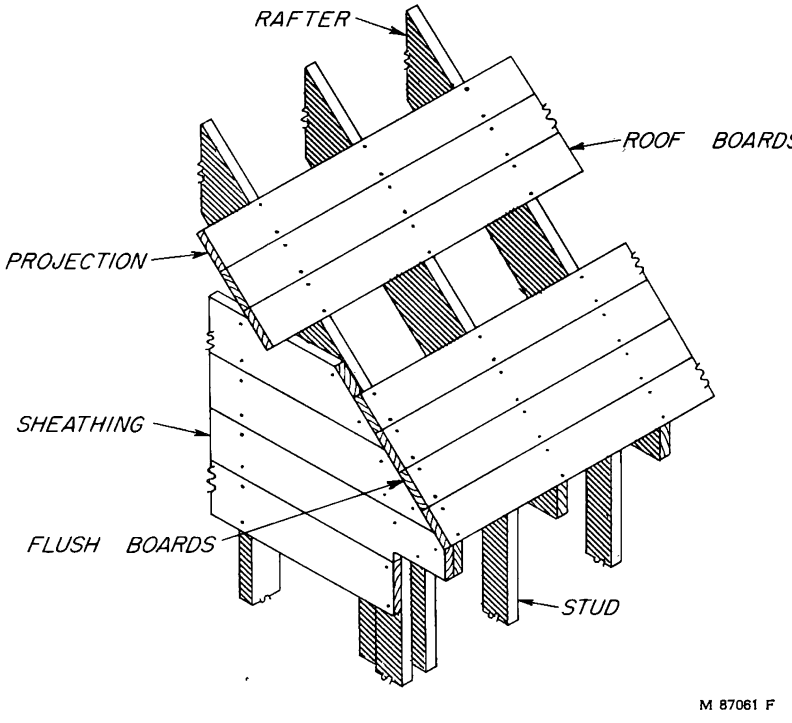

FIGURE 50.—Wood board roof sheathing at ends of gable roof.

have a 2-inch clearance for fire protection. Roof boards should be securely nailed to the rafters and to the headers around the opening (*24*).

Wood Board Sheathing at Valleys

Wood board sheathing at valleys and hips should be fitted to give a tight joint and should be securely nailed to the valley or hip rafter (fig. 51). This will give a solid and smooth base for the flashing.

EXTERIOR TRIM AND MILLWORK

Exterior trim is that part of the exterior finish other than the wall coverage (*52*). It includes such items as window and door trim, cornice, rake or gable trim, and porch trim. Much of this material is cut, fitted, and nailed in place on the job. Other material or assemblies, such as louvers and shutters, may be shop manufactured.

The properties (*41*) desired in materials used for trim are good painting and weathering characteristics, easy working qualities, and maximum freedom from warp. Decay resistance is also desirable where materials may absorb moisture in such items as the caps and the bases of porch columns, posts, rails, and shutters. Heartwood of the cedars, cypress, and redwood has high decay resistance. Less durable species may be treated to make them decay resistant. Coating the end joints or miters of members subjected to moisture con-

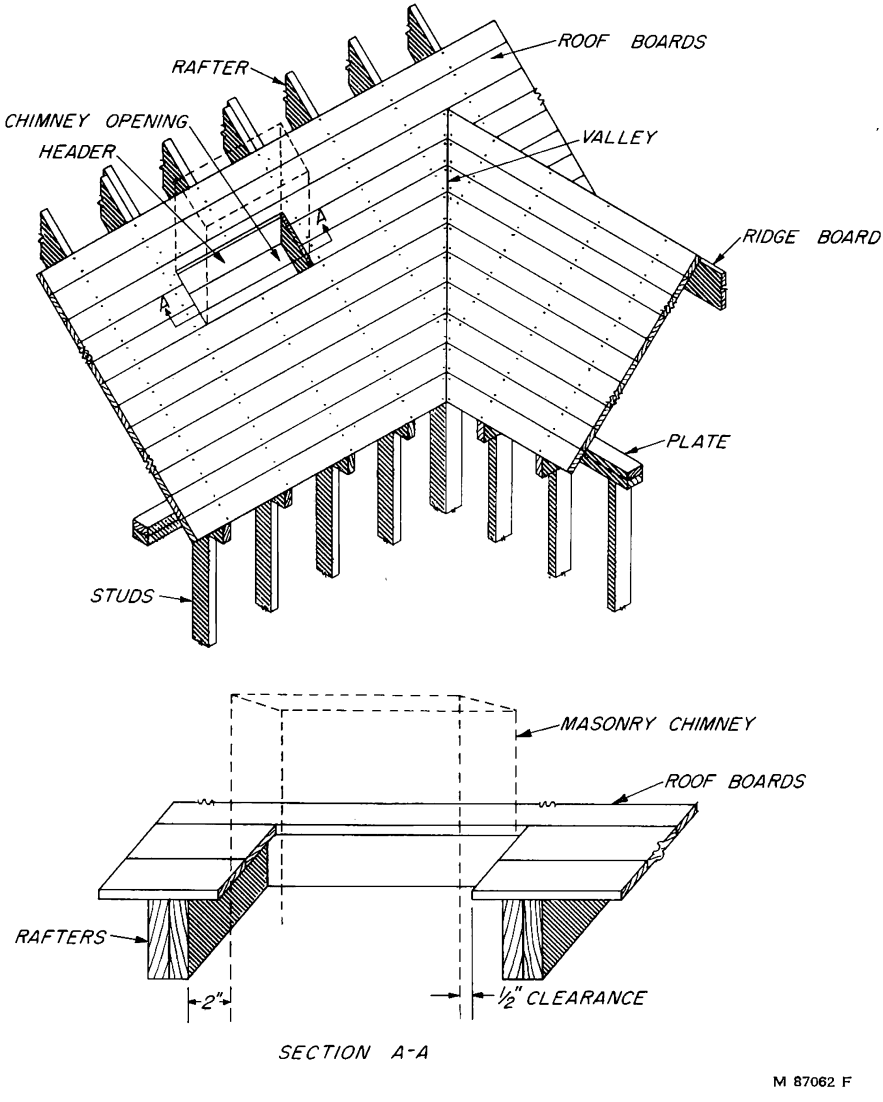

FIGURE 51.—Wood board roof sheathing detail at valley and chimney openings. *Section A–A* shows clearance from masonry.

ditions is recommended. White lead paste is often used for this purpose.

Fastenings used for trim, whether nails or screws, should preferably be rust-resistant, i. e., hot-dipped galvanized, aluminum, or cadmium plated. Cement-coated nails are not rust-resistant. Finish nails may be used for parts other than door or window casings, but they must be set and then puttied after the prime coat of paint. This method of fastening will generally prevent rust stains of nailheads. Some of the trim, particularly the cornice and rake on the gable ends, is installed before the roof shingles are applied.

Material used for exterior trim should preferably be of a Select grade, free from knots, pitch pockets, and waney edges. Moisture content should be approximately 12 percent, except in the dry Southwestern States, where the moisture content should average about 9 percent.

Cornice Construction

The cornice is that projection of the roof at the eaves that forms a connection between the roof and the side walls. The three general types of cornice are the box, the closed, and the open, as shown in figure 52.

Box cornice.—The typical box cornice (fig. 52, *A*) utilizes the rafter projection for nailing surfaces for the facia and soffit boards. The soffit provides a desirable area for inlet ventilators (see Ventilation, page 111). A frieze board is often used at the wall to receive the siding. In climates where snow and ice dams may occur on overhanging eaves, the soffit of the cornice may be sloped outward and left open ¼ inch at the facia board for drainage.

Closed cornice.—The closed cornice (fig. 52, *B*) has no rafter projection. The overhang consists only of a frieze board and a shingle or crown molding. This type is not so desirable as a cornice with a projection, because it gives less protection to the side walls.

Wide box cornice.—The wide box cornice (fig. 52, *C*) requires framing members called lookouts, which serve as nailing surfaces and supports for the soffit board. The lookouts are nailed at the rafter ends and are also toenailed to the wall sheathing and nailed directly to the stud. The soffit can be of various materials, such as beaded ceiling, plywood, or bevel siding. A bed molding may be used at the juncture of the soffit and frieze. This type of cornice is often used in hip-roof houses, and the facia board usually carries around the entire perimeter of the house.

Open cornice.—The open cornice (fig. 52, *D*) may consist of a facia board nailed to rafter ends. The frieze is either notched or cut out to fit between the rafters and is then nailed to the wall. The open cornice is often used for a garage. When it is used on a house, the roof boards, being visible from below from rafter ends to the wall line, should consist of finished material. Dressed and matched V-beaded boards are often used.

Cornice return.—The cornice return is the end finish of the cornice on a gable roof (fig. 53). The design of the cornice return depends to a large degree on the rake or gable projection and on the type of cornice used.

In a close rake (a gable end with very little projection) (fig. 53, *A*), it is necessary to use a frieze or rake board as a finish for siding ends. This board is usually 1⅛ inches thick and follows the roof slope to meet the return of the cornice facia. Crown molding or other type of finish is used at the edge of the shingles.

Where the gable end and the cornice have some projection (fig. 53, *B*), a box return may be used. The facia board and molding are carried around the return. Trim on the rake projection is finished at the cornice return.

A wide cornice with a small gable projection may be finished as shown in figure 53, *C*. Many variations of this trim detail are pos-

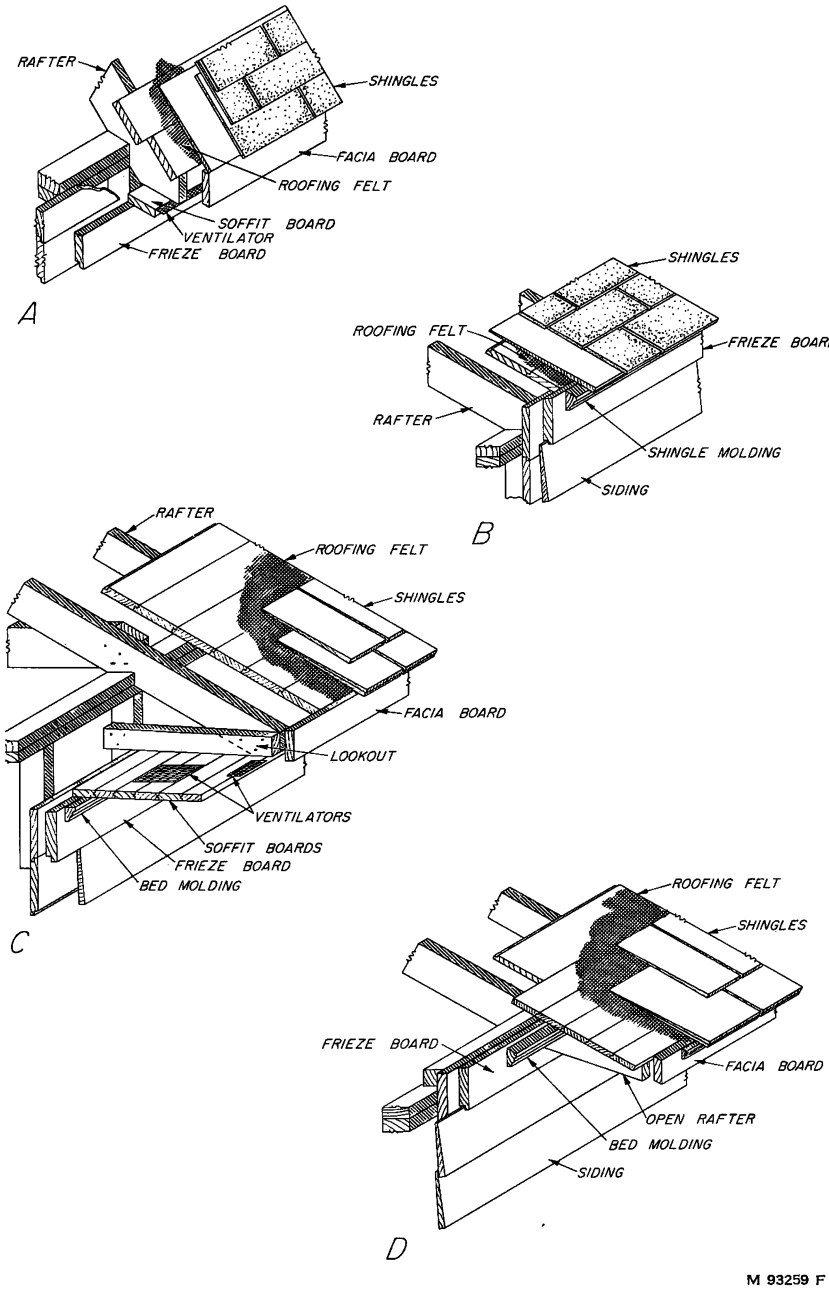

FIGURE 52.—Cornice construction. *A*, Box; *B*, closed cornice; *C*, wide box; *D*, open.

sible. For example, the frieze board at the gable end might be carried to the eave line and mitered with the facia board of the cornice. The siding is then carried across the cornice end to form a return.

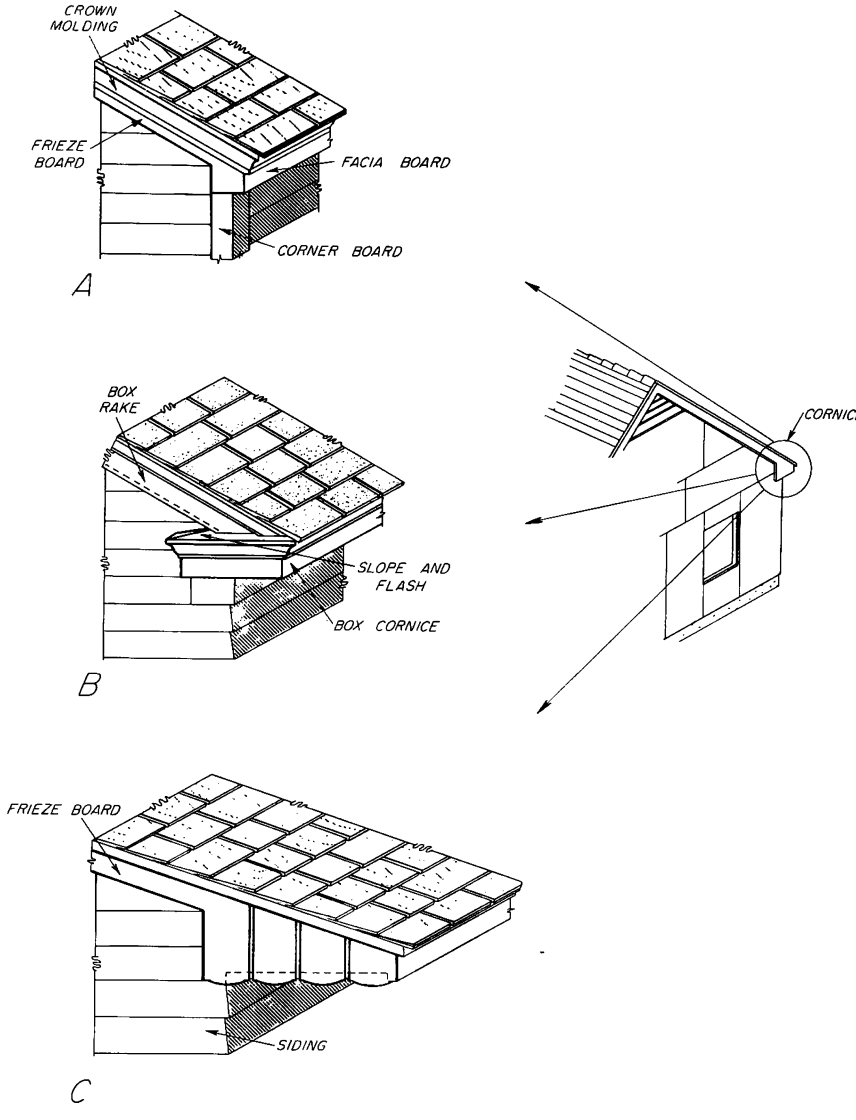

FIGURE 53.—Types of cornice returns. *A*, closed; *B*, box; *C*, wide.

Rake or Gable-End Finish

The rake section is that trim used along the gable end of a house. There are three general types commonly used; the closed, the box with a projection, and the open, as shown in figure 54.

The closed rake, as shown in figure 54, *A*, often consists of a frieze or rake board with a crown molding as the finish. A 1- by 2-inch square-edge molding is sometimes used in lieu of the crown molding. When fiberboard or gypsum sheathing is used, it is necessary to use a

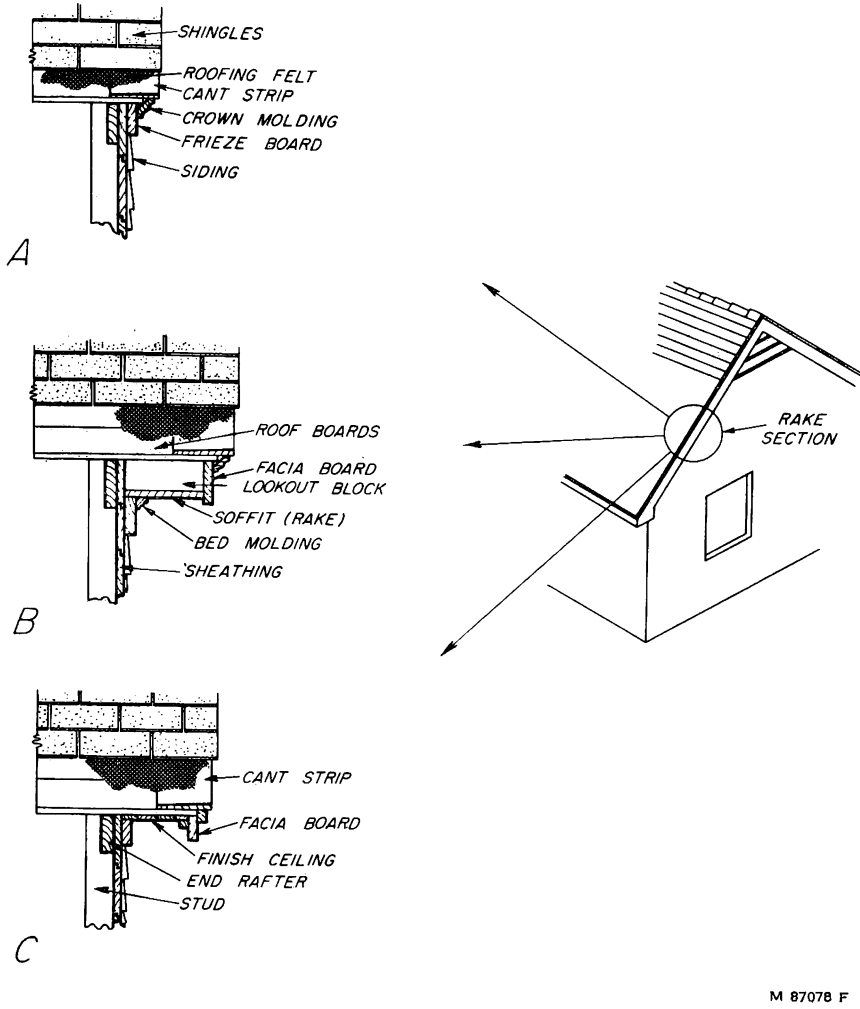

FIGURE 54.—Types of rake or gable-end finish. *A*, Closed; *B*, box; *C*, open.

narrow frieze board that will leave a surface for nailing the siding into the end rafters. If a wider frieze is used, nailing blocks must be provided between the studs. Wood sheathing does not require nailing blocks.

The trim used for a box rake section requires the support of the projected roof boards (fig. 54, *B*). In addition, lookouts or nailing blocks are fastened to the side wall and to the roof sheathing. These lookouts serve as a nailing surface for both the soffit and the facia boards. The ends of the roof boards are nailed to the facia. The frieze board is nailed to the side-wall studs, and the crown and bed moldings complete the trim.

The underside of the roof sheathing of the open projected rake (fig. 54, *C*) is generally covered with liner boards such as 5/8-inch beaded ceiling. The facia is held in place by nails through the roof sheathing.

304696 O—55——5

ROOF COVERINGS

Roof coverings should provide a long-lived waterproof finish that will protect the building and its contents from rain, snow, wind, and, to some extent, heat and cold. Many materials have withstood the test of time and have proved satisfactory under given service conditions.

Materials used for pitched roofs are wood, asphalt, and asbestos shingles, and also tile and slate. Sheet materials such as roll roofing, galvanized iron, aluminum, copper, and tin are sometimes used. For flat or low-pitched roofs, composition or built-up roofing with a gravel topping or cap sheet is frequently used. The choice of materials may be influenced by first cost, local code requirements, or local preferences based upon past experience (*35*).

In shingle application, the exposure distance is important, and the exposure depends much on the roof slope and the type of shingle used. The minimum slope on main roofs is 4 in 12 for wood, asphalt, asbestos, and slate shingles, and 2½ in 12 for tile roofing. For built-up roofs and for built-up roofs with mineral cap sheets, the maximum slope is 3 in 12.

Underlay or roofing felt is normally required for asphalt, asbestos, and slate shingles and tile roofing, but it may be omitted for wood shingles. In areas where snow is common and ice dams occur (melting snow that freezes at the eave line), it is good practice to use one course of 55-pound smooth-surfaced roll roofing at the eaves (fig. 55).

Built-up construction is often used for flat or low-pitched roofs and consists of a number of layers of asphalt-saturated felt mopped down with hot asphalt or tar.

Metal roofs (tin, copper, galvanized iron, or aluminum) are sometimes used on flat decks of dormers, porches, or entryways. Joints should be watertight, and the deck should be properly flashed at the juncture with the house. Nails should be of the same metal as that used on the roof, except that with tin roofs steel nails may be used. All exposed nailheads in tin roofs should be soldered.

Asphalt Shingles

The minimum recommended weight for asphalt strip shingles is 210 pounds for the square-butt and 215 pounds for the hexagonal type for each 100 square feet of coverage. Heavier shingles are available in shingle strips or in individual shingles, and they are often well worth using in house construction. The square-butt strip shingle is 12 by 36 inches in size, has three tabs, and should be laid with 5 inches of its width exposed to the weather. There are 27 strips in a bundle, and three bundles will cover 100 square feet. Bundles should be piled flat for storage so that strips will not curl when the bundles are opened for use. The method of laying an asphalt-shingle roof is shown in figure 56, *A*. The underlay sheets of 15-pound saturated felt should overlap each other 4 to 6 inches. In areas where ice dams occur from melting snow, the underlay at the eave line should be roll roofing weighing about 55 pounds per roll of 108 square feet. It should extend upward well above the inside line of the wall. A wood-shingle base

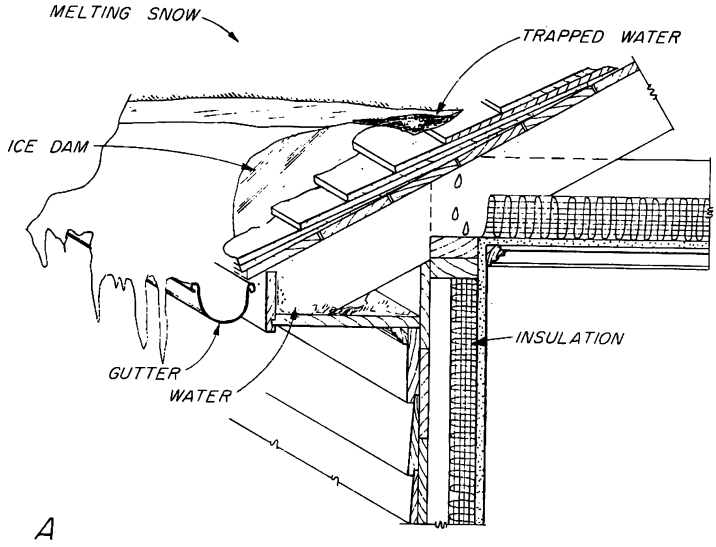

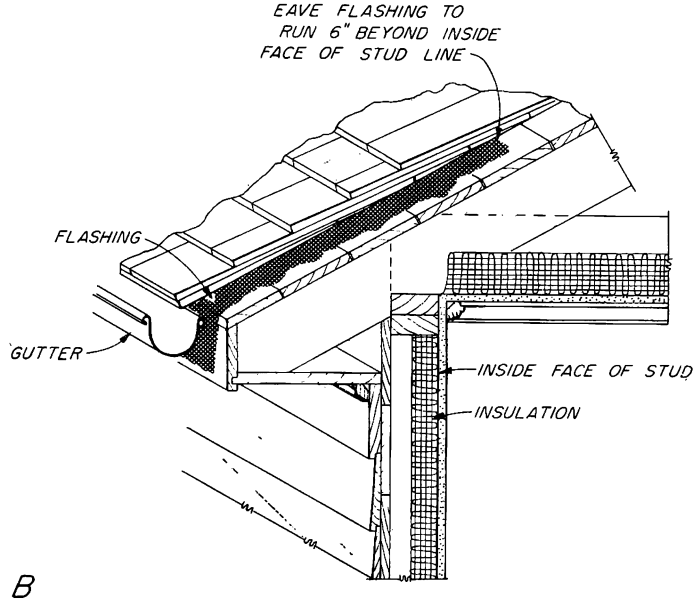

M 95577 F

FIGURE 55.—*A*, Snow and ice dams. Ice dams often build up on the overhang of roofs and in gutters, causing melting snow water to back up under shingles and under the facia board of closed cornices. Damage to ceilings inside and to paint outside results. *B*, Eave protection for snow and ice dams. Lay smooth surface 55-pound roll roofing on roof sheathing over the eaves extending upward well above the inside line of the wall. For closed cornices, extend the roofing over the facia board back of the gutter.

course, with shingles spaced 1/8 to 1/4 inch apart to permit swelling, should be laid at the eave with at least a 1-inch projection beyond the edge of the roof to provide a good drip. The first course of asphalt shingles is doubled; or, if desired, a starter course may be used under the first asphalt-shingle course. This first course of asphalt shingles should extend downward beyond the wood shingles about 1/2 inch to prevent the water from backing up under the shingles.

Several chalklines will help aline the shingles so that tabs and tab notches will be in a straight line for good appearance. Each shingle

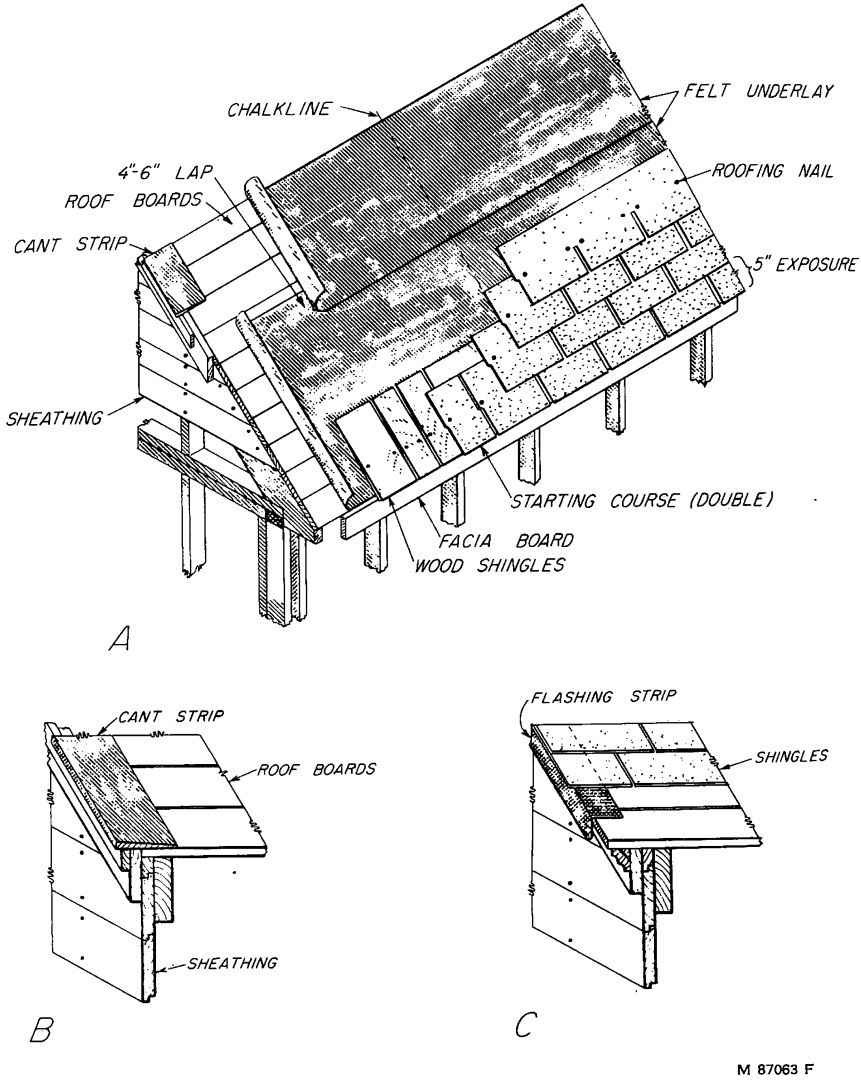

FIGURE 56.—Application of asphalt shingles. *A*, Strip shingles; *B*, cant strip at gable end; *C*, flashing at gable end.

strip should be nailed with six 1-inch copper or hot-dipped galvanized nails. Good nailing is important. When a nail penetrates a crack or a knothole, it should be removed and replaced in sound wood; otherwise it will gradually work out and cause the upper tab to hump. Interlocking and other special shingles should be laid according to the manufacturer's directions. Cementing tabs of strip shingles is recommended for areas subject to high winds.

Cant strips (fig. 56, *B*) of bevel siding ½ by 6 inches or ½ by 8 inches may be laid thin edge inward along the gable edge to guide the water away from the edge. This is especially important where the rake section has little projection. Metal edge flashing (fig. 56, *C*) is a satisfactory alternate.

Wood Shingles

Wood shingles of the types commonly used for houses are No. 1 grade. Such shingles (*41*) are all-heart, all-edge-grain, and tapered. Western redcedar, redwood, and baldcypress are the principal commercial shingle woods, as their heartwood has high decay resistance and low shrinkage. Four bundles of 16-inch shingles laid 5 inches to the weather will cover 100 square feet. Width of shingles as supplied varies, but maximum width is 14 inches. Recommended exposures for the common shingle sizes are shown in table 2.

TABLE 2.—*Recommended exposures for wood shingles*

Length	Butt thickness in inches	Recommended exposure	
		Roof slope less than 5 in 12	Roof slope 5 in 12 and steeper
Inches		*Inches*	*Inches*
16	5 butts in 2	3¾	5
18	5 butts in 2¼	4¼	5½
24	4 butts in 2	5¾	7½

Figure 57 illustrates the proper method of laying a wood-shingle roof. Underlay or roofing felt is not usually required for wood shingles; but in areas where ice dams occur from melting snow, lay a strip of 55-pound roll roofing along the eave line, extending upward well above the inside line of the wall. In houses with low-pitched roofs and in areas of high winds, it is advisable to include an underlay for the entire roof. In very damp climates, however, the underlay should be omitted and spaced roof boards should be used for roof sheathing to permit rapid drying of the underside of the shingles.

The first shingle course should be laid double, with the upper ones overlapping those beneath, and it should extend 2 to 2½ inches beyond the facia members (*22*). This precaution will prevent the water from backing up underneath the shingles. Shingles should be

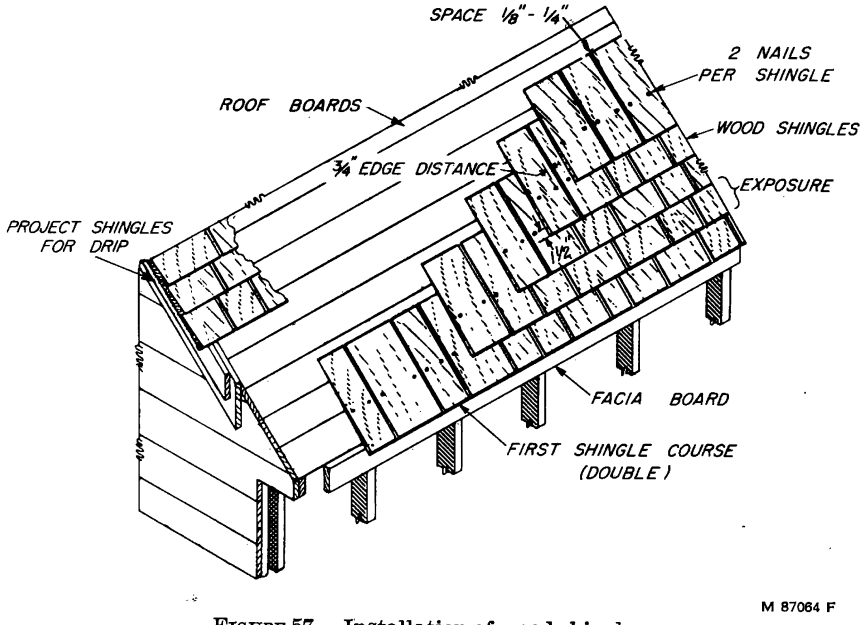

FIGURE 57.—Installation of wood shingles.

laid 1/8 to 1/4 inch apart to allow for swelling when wet, with the wider ones being farther apart. The joints between shingles in one course should be lapped at least 1½ inches by the shingles in the course above. The joints in succeeding courses should be spaced so that the joint in one course is not in line with the joint in the first course nor the second course above it.

Only two nails should be used for each shingle. The distance of the nails from the butt edge of the shingle being nailed, should be shingle exposure plus 1½ inches, with an edge distance of not more than ¾ of an inch. For example, if the shingle exposure is to be 5 inches, add the 1½ inches, and thus the nail would be 6½ inches from the butt edge of the shingle being nailed. Threepenny hot-dipped, galvanized, or copper shingle nails should be used for 16- and 18-inch shingles and fourpenny nails for 24-inch shingles. A cant strip along the gable end is also an advantage with wood shingles, as it is for asphalt shingles (fig. 56, *B*). Shingles wider than 8 inches should be split and nailed as 2 shingles.

Built-Up Roofs

Built-up roof coverings are installed by roofing companies that specialize in this field of work. Roofs of this type may have 3, 4, or 5 layers of roofer's felt, each mopped down with tar or asphalt, with the final surface coated with asphalt and covered with gravel embedded in asphalt or tar, or covered with a cap sheet. For convenience, it is customary to refer to built-up roofs as 10-year, 15-year, or 20-year roofs, depending upon the method of application.

For example, a 15-year roof over a wood deck (fig. 58, *A*) may have a base layer of 30-pound saturated roofer's felt laid dry, with edges lapped and held down with roofing nails. All nailing should be done with either roofing nails driven through flat tin caps or with 10-gage roofing nails having heads of not less than 5/8-inch diameter. The dry sheet is intended to prevent tar or asphalt from entering the rafter spaces. Three layers of 15-pound saturated felt follow, each of which is mopped on with hot tar rather than being nailed. The final coat of tar or asphalt may be covered with roofing gravel or a cap sheet of roll roofing.

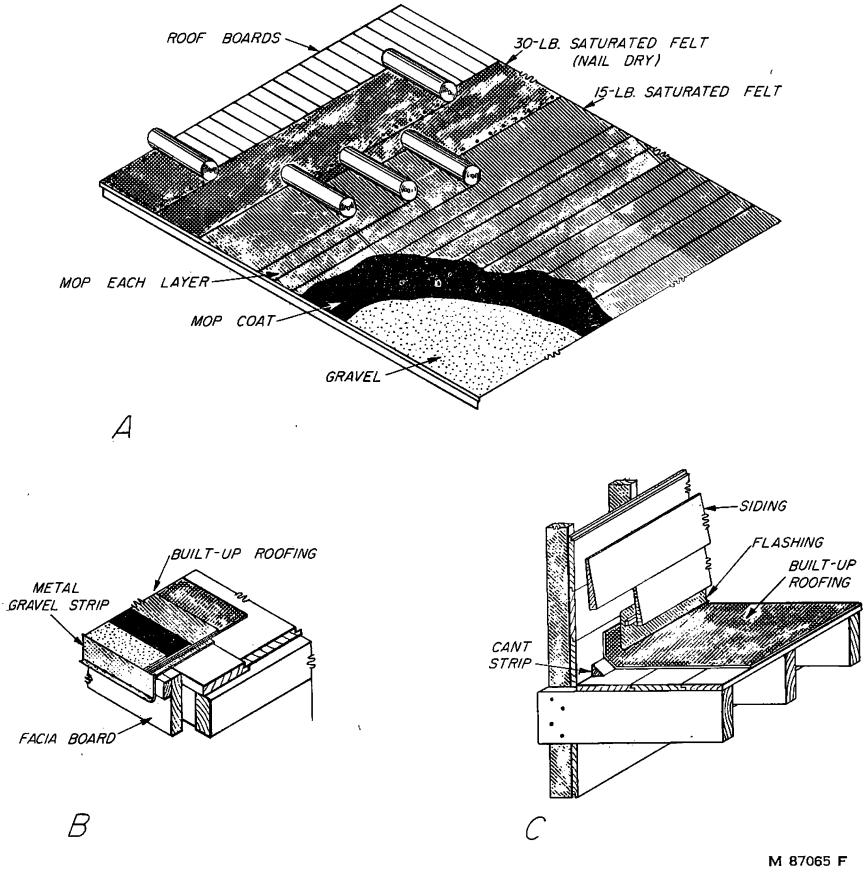

FIGURE 58.—Built-up roof. *A*, Installation of roof; *B*, drip section; *C*, flashing at building line.

The cornice or eave line of projecting roofs is usually finished with metal edging or flashing, which acts as a drip. A metal gravel strip is used in conjunction with the flashing at the eaves when the roof is covered with gravel (fig. 58, *B*). Where built-up roofing is fin-

ished against another wall, the roofing is turned up on the wall sheathing over a cant strip and is flashed with metal (fig. 58, *C*). This flashing is generally extended up about 4 inches above the bottom of the siding.

Finish at Ridge

The most common type of ridge and hip finish is known as the Boston ridge. Asphalt-shingle squares (one-third of a strip) are used over the ridge and blind-nailed (fig. 59, *A*). Each shingle is lapped 5 to 6 inches to give double coverage. In areas where driving rains occur, it is well to use metal flashing under the shingle ridge.

A wood-shingle roof (fig. 59, *B*) can also be finished in a Boston ridge. Shingles 6 inches wide are alternately lapped, fitted, and blind-nailed. Flashing should be used under the wood-shingle ridge.

A metal ridge roll can also be used on asphalt-shingle or wood-shingle roofs (fig. 59, *C*). This ridge is formed to the roof slope and should be of copper, galvanized iron, or aluminum.

EXTERIOR FRAMES, WINDOWS, AND DOORS

Windows are used in a house principally to allow entry of light and air, but they may also be an important part of the architectural design. In habitable rooms the glass area should be not less than 10 percent of the floor area; in basements, 2 percent of the floor area. Windows are available in many types, each having its own merit. The principal types are double-hung, casement, stationary, and projected, and they may be made of wood (*32*, *33*, *52*) or metal. Glass blocks are sometimes used for admitting light in places where transparency or ventilation is not required.

A type of insulated glass is available that is made up of two or more sheets of spaced glass with hermetically sealed edges. This type has more resistance to heat loss than a single thickness, is less subject to condensation, and may be substituted for storm sash.

Since it is not practical to obtain an airtight fit where sash contacts the frame, weatherstripping is often used at these points to reduce air infiltration. Many manufacturers make window units that are ready for installation with sash fitted and glazed, and with weatherstrips, operating balances, and hardware installed. Units that combine screens and storm sash are also available.

Wood sash, windows, and door frames should be made from all-heart stock of a decay-resistant species or of wood treated to make it decay resistant. Most manufacturers are now treating sash and window and door frames for decay resistance. This treatment insures longer life to the exposed parts and to covered joints.

Double-Hung Windows (Check-Rail Windows)

The double-hung window is the most familiar window type. It consists of an upper and a lower sash that join at a meeting rail (fig. 60). The sash are retained in separate grooves in the side jambs and, being offset, may move vertically, one past the other (fig. 60, *B*). Each sash is counterbalanced with weights, springs, or sash balances.

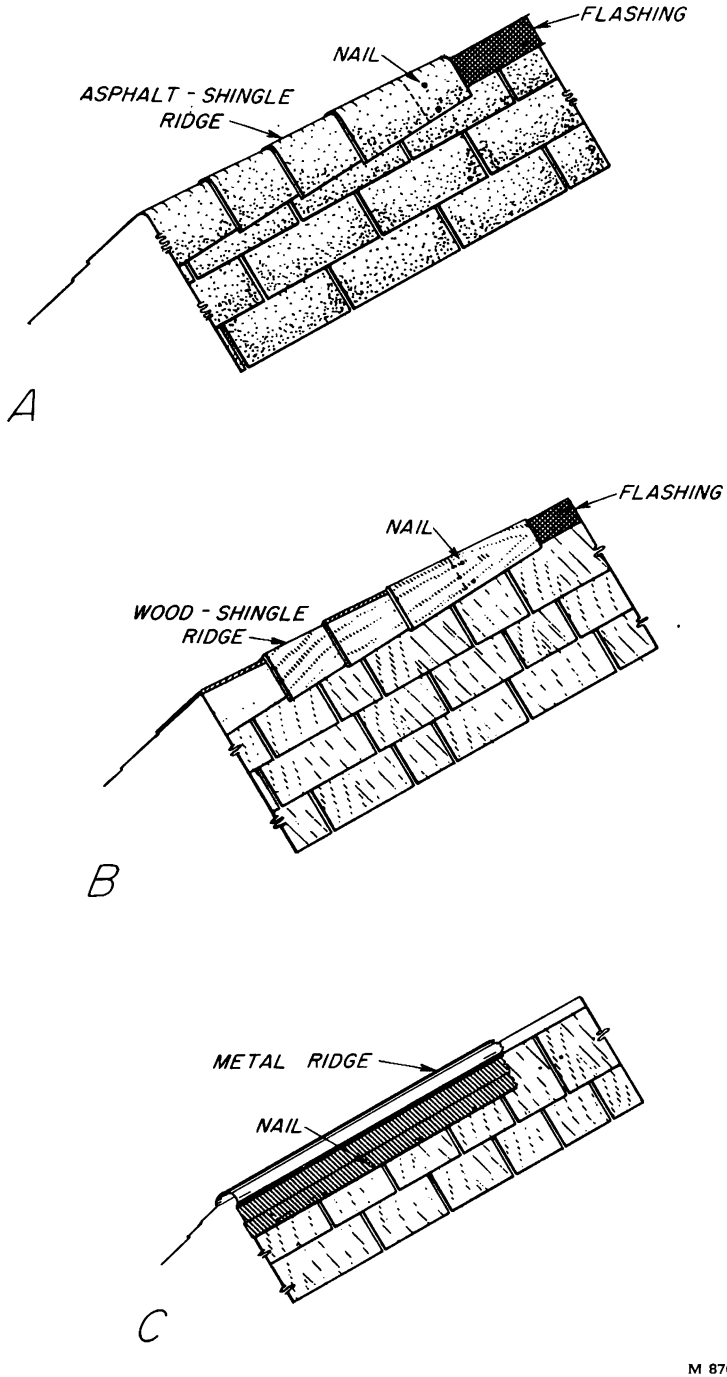

FIGURE 59.—Finish at ridge. *A*, Boston ridge with asphalt shingles; *B*, Boston ridge with wood shingles; *C*, metal ridge.

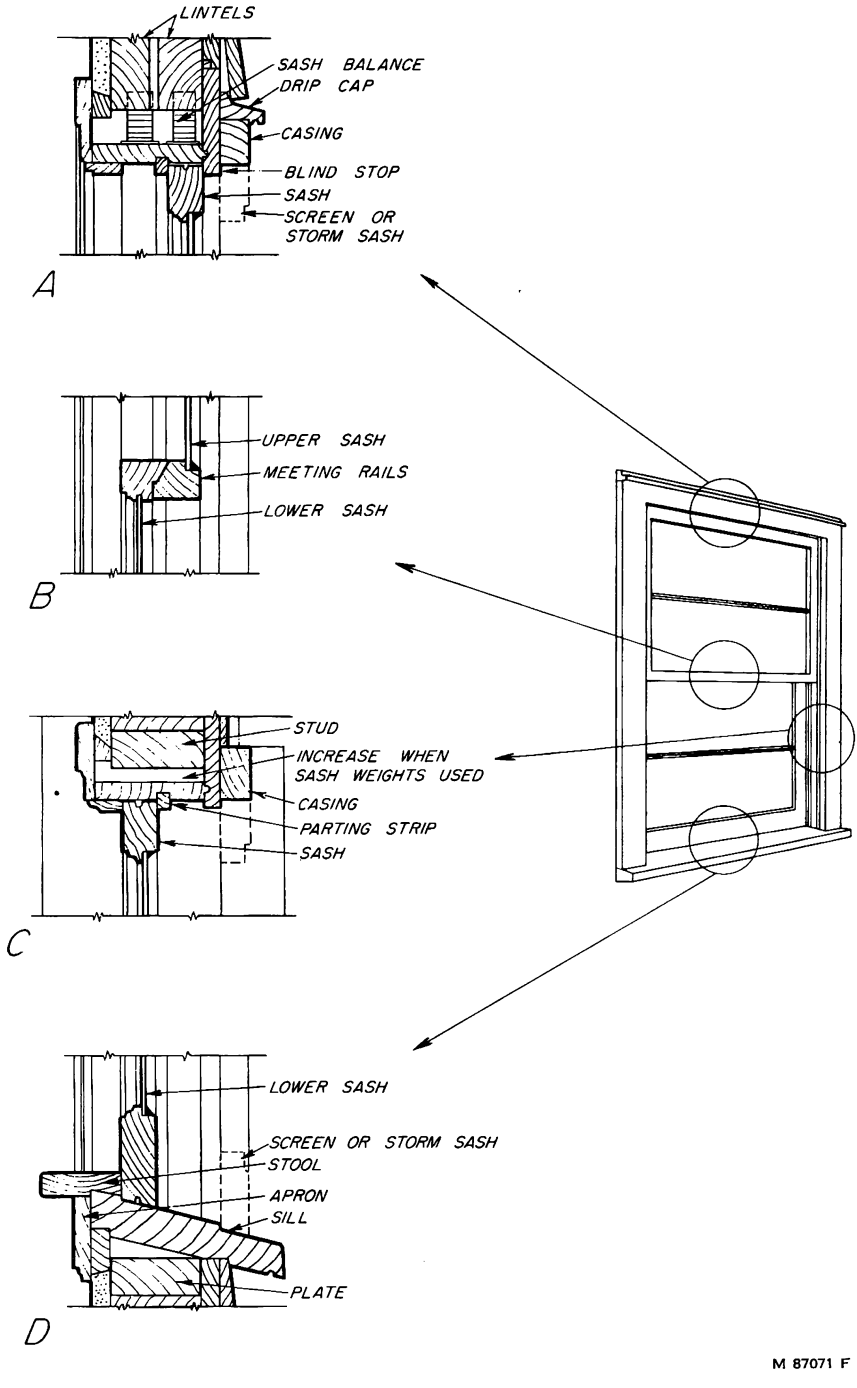

FIGURE 60.—Double-hung windows. Cross sections: *A*, Head jamb; *B*, meeting rails; *C*, side jamb; *D*, sill

Sash weights located in a pocket in back of the side jamb (fig. 60, *C*) have been largely replaced in recent years by various types of spring balances (fig. 60, *A*). Weatherstrip is located between the frame and sash and often at the meeting rails.

The jambs, or sides and top of the frame, are usually made of nominal 1-inch material and the sill of 2-inch material. Window sills should have a slope of 3 to 12 for good drainage (fig. 60, *D*). Sash are 1⅜ inches thick, while storm sash and screens are 1⅛ inches.

Assembled frames are placed in the rough opening and plumbed and then nailed to the framing studs and the header through the casing or the blind stop.

Hardware for double-hung windows consists of (a) sash lifts that are fastened to the bottom rail of the lower sash, and (b) sash fasts that are locking devices used at the meeting rail. The sash fasts not only lock the window but also draw the rails together to decrease air infiltration. On wide sash it is good practice to use two sash fasts.

Various arrangements of double-hung windows may be used, in mullion or double pattern and in groups of three or more. One of the popular openings consists of a double-hung window on each side of a stationary or picture window. Large window openings must be framed with headers of sufficient size to carry wall loads.

Casement Sash (Outswinging Type)

Casement sash are side-hinged and usually of the outswinging type because they are easier to make weathertight than the inswinging sash. Screens and storm sash are located on the interior, and casements are operated by means of cranks with hinge and ratchet arrangements called closers (fig. 61).

Frames are often made of 1⅜-inch material, especially in the larger sizes when sash are used in pairs. Exterior trim is similar to that of double-hung windows and consists of casing and drip cap (fig. 61, *A*). The sill of the frame has a slope of approximately 3 in 12 (fig. 61, *D*).

Sash locks are located on the meeting stiles (fig. 61, *B*) of double-casement sash, and it is well to use two, as these locks pull the windows together tightly. Casement hinges are located on the exterior, and for this reason they should be of rust-resistant finish, even though they may be painted (fig. 61, *C*). This also applies to the screws used. Weatherstripping should be used when casement sash are located in a heated room.

Stationary Windows

Stationary or fixed sash (fig. 62) are sometimes glazed with insulated glass, in which case they do not require storm sash. In cold climates, however, the single-glazed sash should be supplemented with storm sash.

The stationary window is often used in conjunction with double-hung windows, which supply air as well as light. They may also be used with a series of louvered vents located at the sides or under the sill. Large sash are sometimes 1¾ inches thick for additional strength.

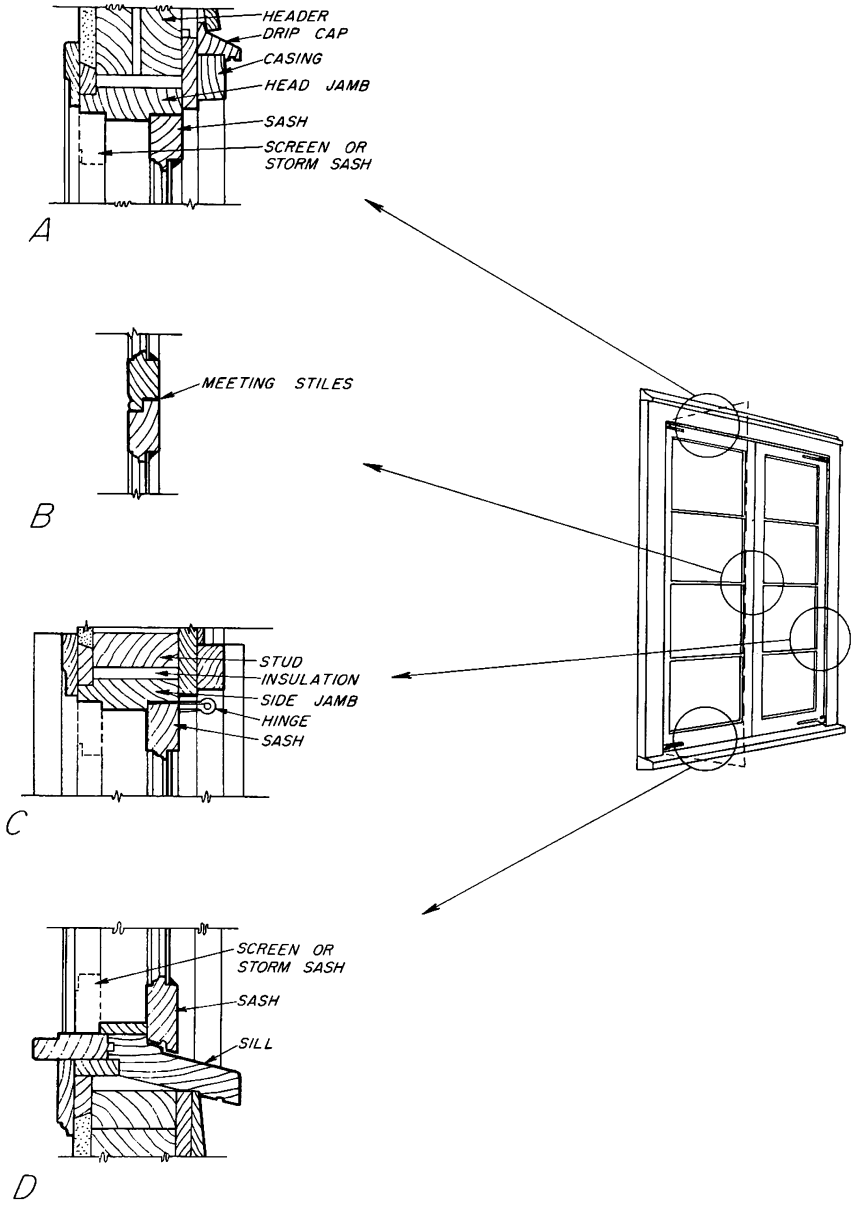

FIGURE 61.—Outswinging casement sash. Cross sections: *A*, Head jamb; *B*, meeting styles; *C*, side jambs; *D*, sill.

Other types of stationary windows may consist of glass set directly into rabbeted framing members. Provision should always be made to supply a casing, a drip cap, and a proper sill.

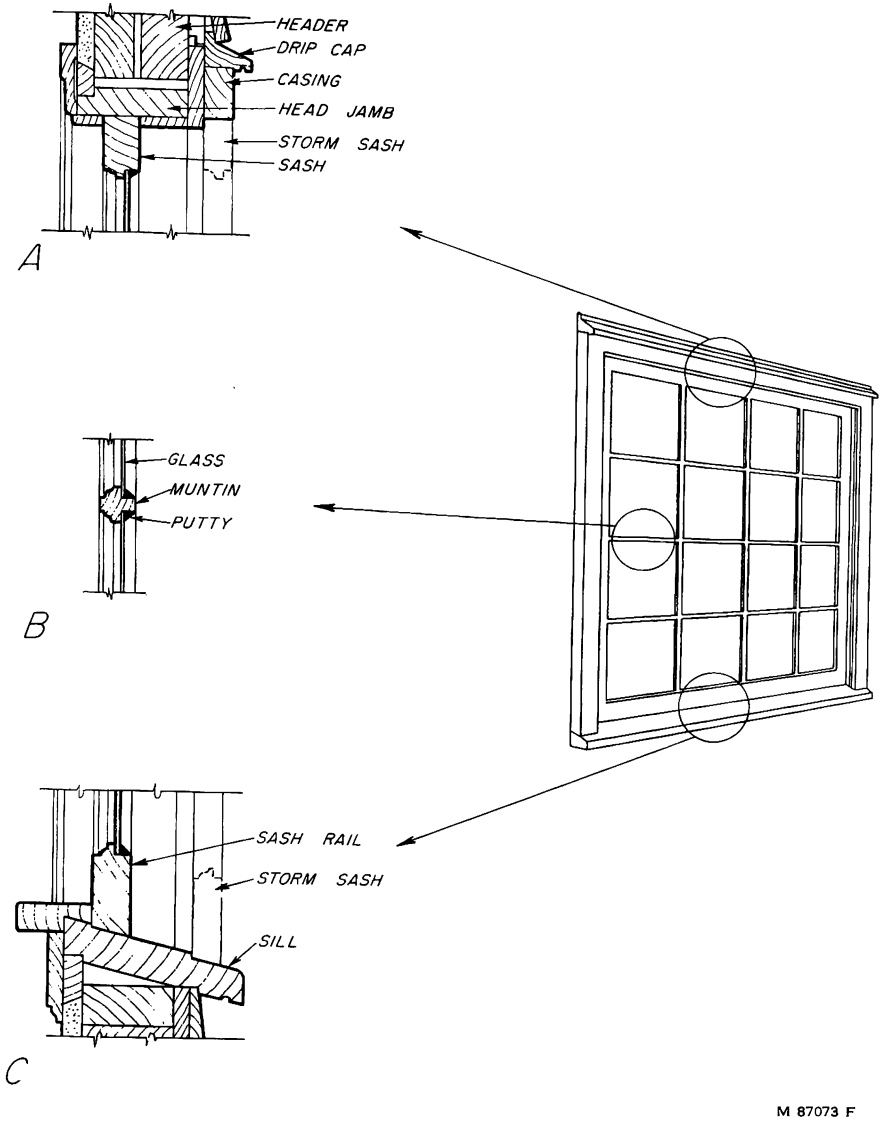

FIGURE 62.—Stationary window. Cross sections: *A*, Head jamb; *B*, muntin; *C*, sill.

Projected Windows

Projected windows (fig. 63) consist of a single or a series of sash equipped with hardware that allows the sash to be swung in at the top and out at the bottom, or of sash that may be hinged at the bottom rail and swung in at the top. Those sash that pivot both in and out are not usually supplied with screen or storm sash because of clearances. Projected sash should be weatherstripped for fully satisfac-

tory results. This type of sash is also used in basement windows, and some hardware allows the sash to be swung in from either the bottom or top.

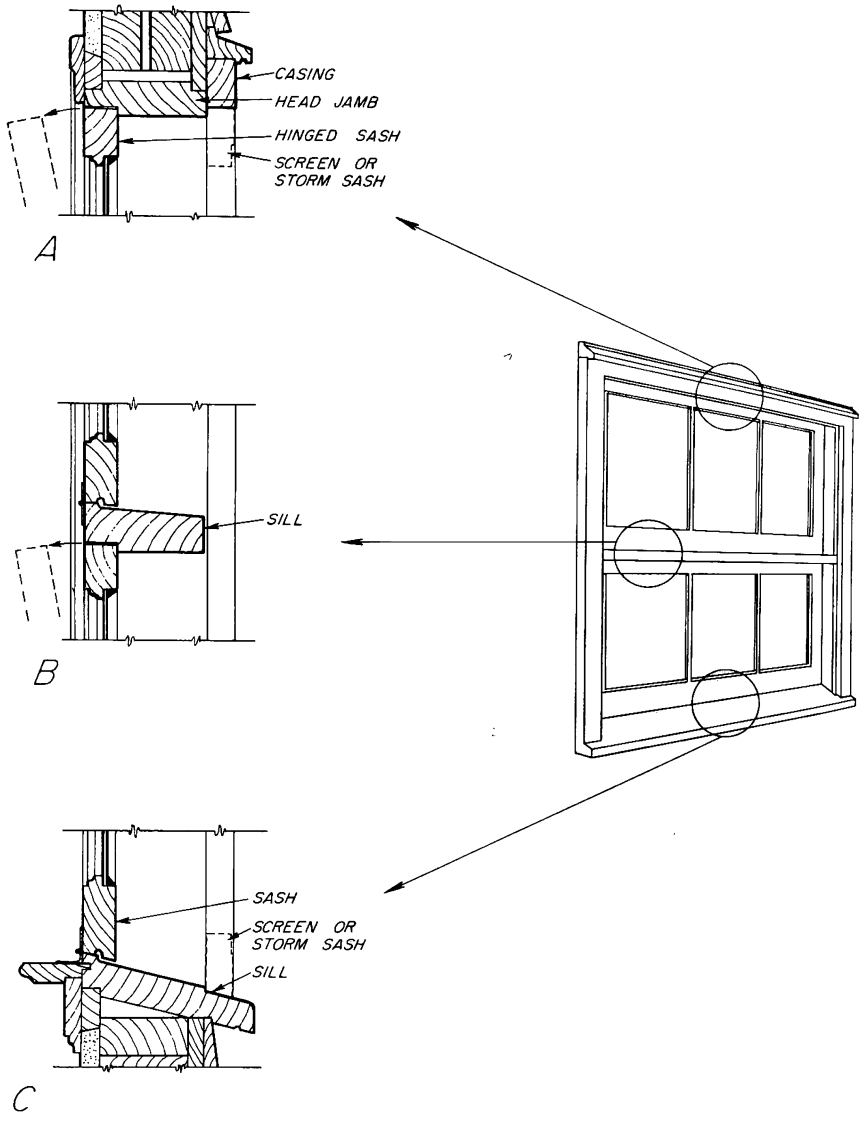

FIGURE 63.—Projected window. Cross sections: *A*, Head jamb; *B*, horizontal mullion; *C*, sill.

Projected windows of the awning type usually consist of tiers of sash, hinged at the top, that swing out. Operation is controlled by means of a crank or similar device.

Metal Sash

Metal sash are available in units made of aluminum or steel, and the principal types are casement (fig. 64), double-hung (fig. 65), projected, and stationary. Lights in the sash are divided in various patterns. The aluminum sash and frames are generally made of solid

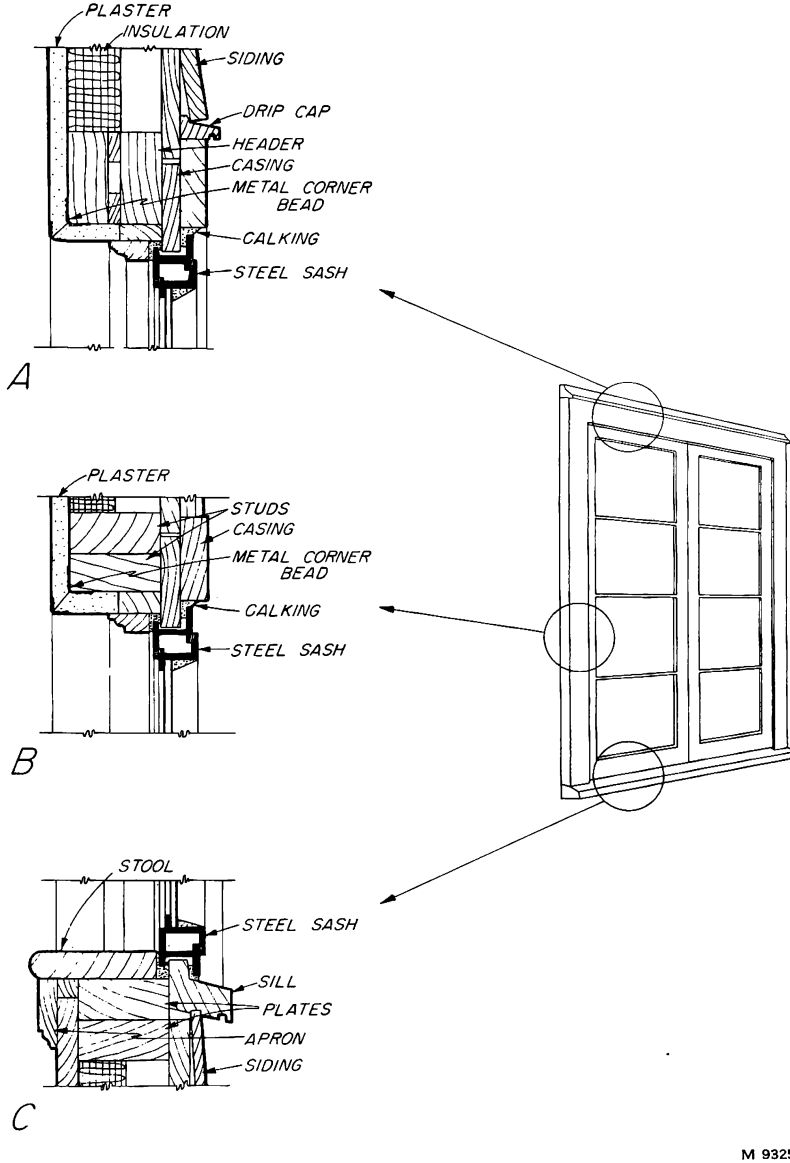

FIGURE 64.—Solid-section steel outswinging casement sash. Cross sections: *A*, Head jamb; *B*, side jamb; *C*, sill.

extruded aluminum alloy, welded at the joints. Steel sash are made of rolled shapes about 1/8 inch thick, most parts being Z-shaped or T-shaped, with welded butt joints. Steel sash should be treated to make them rust-resistant. Hardware, such as hingles, latches, and operators, is special and provided with the window. Screens should be ordered with the windows.

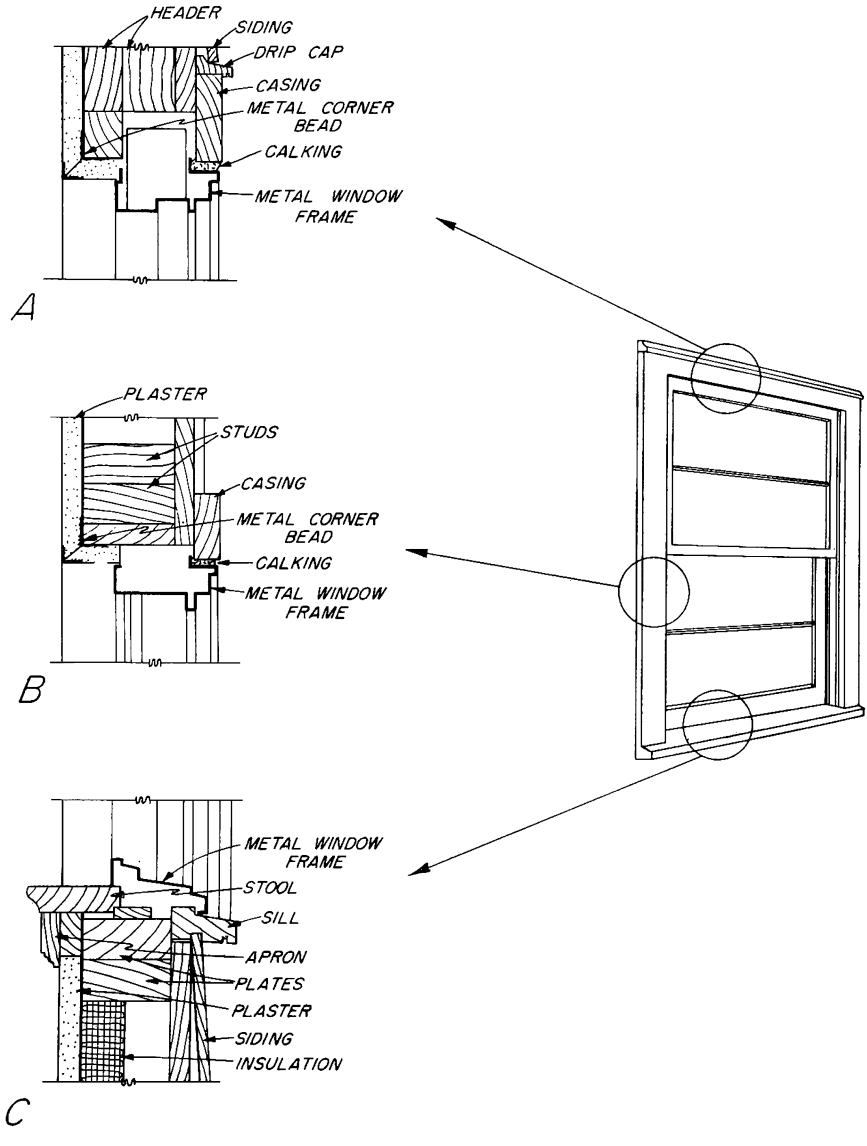

FIGURE 65.—Double-hung metal windows. Cross sections: *A*, Head; *B*, side jamb; *C*, sill.

Actual details for installation vary according to the manufacturer's method of manufacture. It is common practice in frame construction to use a wood buck in the window opening to hold the metal frame. The space between the metal and the wood is filled with calking compound.

Exterior Doors and Frames

Exterior doors should be 1¾ inches thick and no less than 6 feet 8 inches high. Main-entrance doors should be 3 feet wide, and service-entrance doors 2 feet 8 inches wide (fig. 66).

The exterior-door frame consists of 1⅜-inch-thick side and head jambs and a 1¾-inch sill (fig. 66, *C*). The sill may be of hardwood for wear resistance, or, if of softer woods, it should have a metal nosing. A hardwood or metal threshold covers the joint between sill and finish floor (fig. 66, *C*). Frames are rabbeted to form stops for the 1¾-inch main door. Stops for the screen or combination door, which is 1⅛ inches thick, are provided for by the edge of the jamb and the exterior casing thickness (fig. 66, *B*).

The exterior trim around the main-entrance door can vary from a simple casing to a molded or plain pilaster with a closed or broken entablature. This decorative feature should always be in keeping with the architecture of the house. If there is an entry hall, it is good practice to have glass window lights included in the main door if no other light is provided.

The door sill should bear solidly on the floor framing, and the frame should be well nailed to the opening framework. This is usually done by nailing through the casing into the studs and header.

Types of Exterior Doors

Exterior doors (fig. 67) are of several types, including flush, panel, and French doors. For methods of hanging doors and installing hardware, see page 141).

Flush doors.—Flush doors (fig. 67, *A*) are made with plywood or other suitable facings applied over a light framework and a core of suitable thickness. The core may be built of solid pieces of wood or as a grillage. The first is called a solid core and the other a hollow core. The solid-core construction is generally preferred for exterior doors, particularly in cold climates. The method of constuction minimizes warping due to differences in humidity on opposite sides of the door.

Panel doors.—Panel doors (fig. 67, *B*) consist of stiles (solid vertical members), rails (solid cross members), and panels (thinner parts filling spaces between stiles and rails). Many types with various wood or glass panels are available.

Glazed doors.—French or glazed doors (fig. 67, *C*) consist of stiles and rails with the space divided into lights by bars called muntins. Such doors are often used in openings leading to porches or terraces. French doors may be used singly or in pairs with an astragal stop between them (fig. 67, *C*).

304696 O—55——6

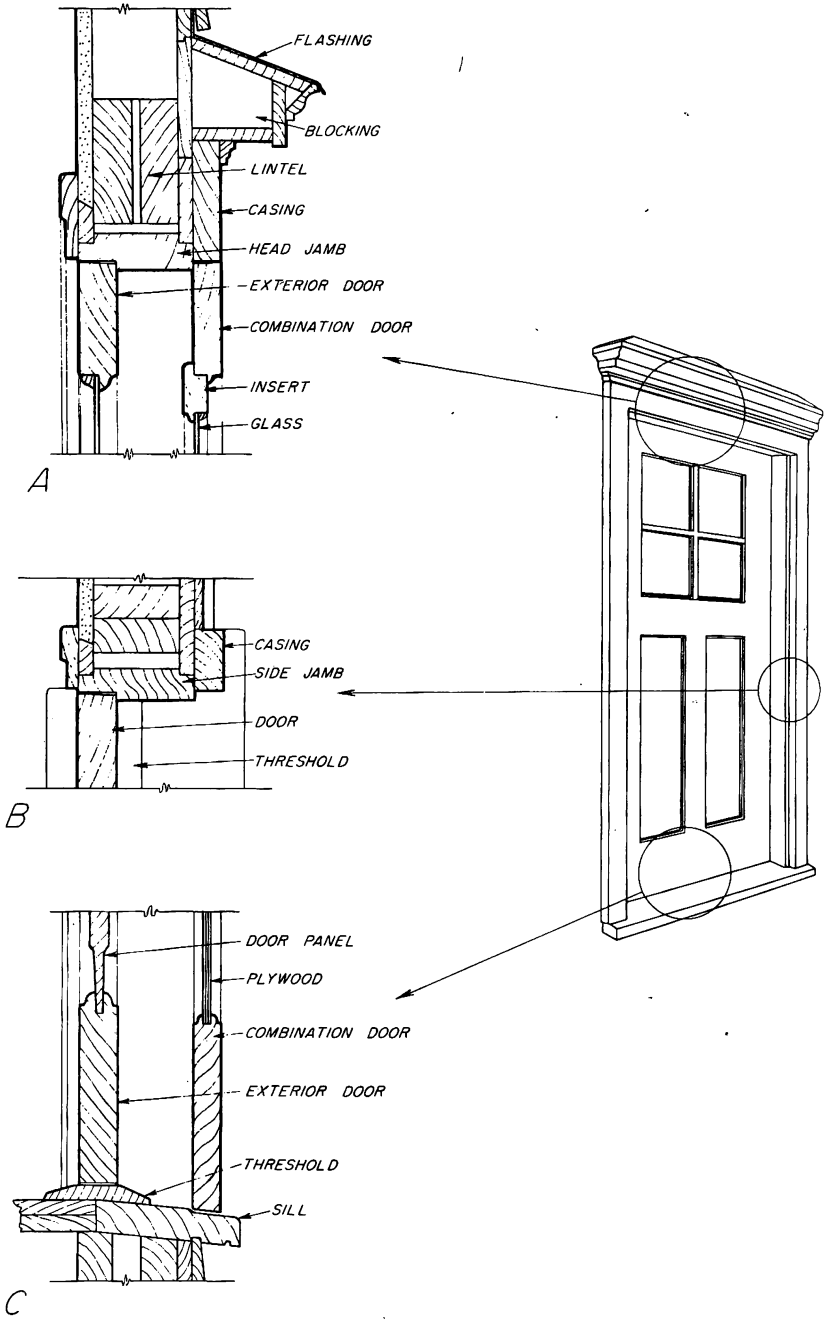

M 87075 F

FIGURE 66.—Exterior door and frame. Exterior-door and combination-door (screen and storm) cross sections: *A*, Head jamb; *B*, side jamb; *C*, sill.

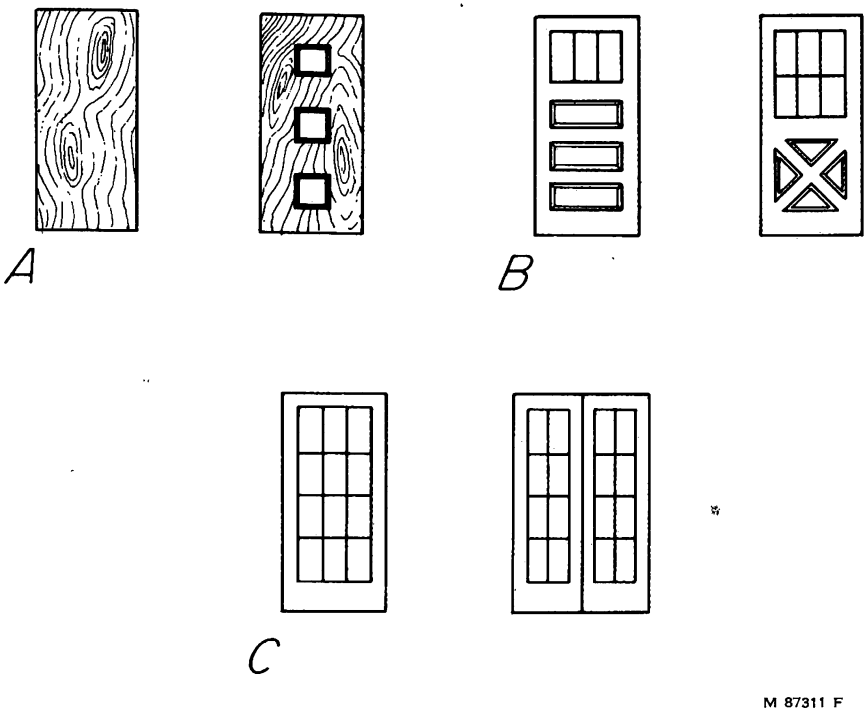

FIGURE 67.—Types of exterior doors. *A*, Flush; *B*, panel; *C*, French or glazed.

EXTERIOR SIDING AND STUCCO

Because the type of exterior covering used on the walls is going to have a great deal to do with the overall appearance and maintenance of the house, its selection should be made with care. Wood siding in different patterns (*52*), wood shingles, plywood, asbestos or asphalt shingles, stucco, and aluminum are some of the types used. Only those most commonly used in the construction of dwellings will be considered here.

Wood Siding

One of the materials most characteristic of the exteriors of American houses is wood siding. The essential properties required for wood siding are good painting characteristics, easy working qualities, and freedom from warp. These properties are present in a high degree in the cedars, eastern white pine, sugar pine, western white pine, cypress, and redwood; also to a good degree in western hemlock, ponderosa pine, spruce, and yellow-poplar; and to a fair degree in Douglas-fir, western larch, and southern yellow pine (*41*).

Material used for exterior siding should preferably be of a Select grade, and should be free from knots, pitch pockets, and waney edges. The moisture content at the time of application should be that which it would attain in service. This would be approximately 12 percent,

except in the dry Southwestern States, where the moisture content should average about 9 percent.

Bevel siding.—Plain bevel siding as shown in figure 68, *A*, is made in nominal 4-, 5-, and 6-inch widths with $\frac{7}{16}$-inch butts, 6-, 8-, and 10-inch widths with $\frac{9}{16}$-inch butts and 6-, 8-, 10-, and 12-inch widths with $\frac{11}{16}$-inch butts. The top edge is $\frac{3}{16}$-inch for all sizes. Bevel siding is generally furnished in random lengths varying from 4 to 16 feet.

Drop siding.—Drop siding (*52*) is generally $\frac{3}{4}$ inch thick and is made in a variety of patterns with either matched or shiplap edges.

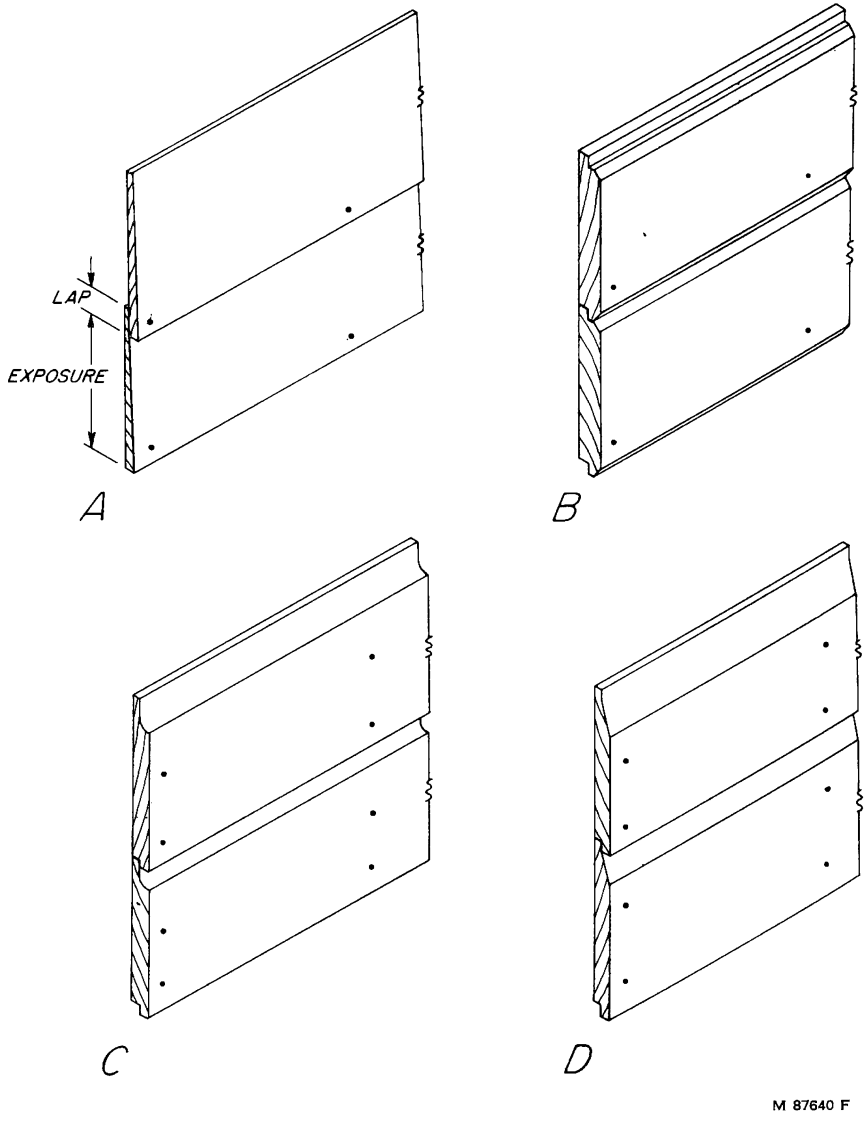

FIGURE 68.—Types of wood siding. *A*, Bevel; *B*, V-rustic; *C*, drop; *D*, rustic drop.

Figure 68, *B*, *C*, and *D*, shows common patterns of drop siding that are applied horizontally. The *B* pattern may also be applied vertically, for example, at gable ends of a house. Drop siding was designed to be applied directly to the studs, and it thereby serves as sheathing and exterior-wall covering. It is widely used in this manner in farm structures, sheds, and garages in all parts of the country, and in mild climates for houses. When used over and in contact with other material, such as sheathing or sheathing paper, water may work through the joints and be held between the sheathing and the siding and set up conditions conducive to paint failures and decay. Such conditions are not common when the side walls are protected by a good roof overhang. Pattern *B* is sometimes selected by builders because it gives a pleasing appearance. However, unless it is protected by a wide overhanging roof, water flowing down the face of the siding is led into the joint, where it is held.

Square-edge siding.—Square-edge or clapboard siding made of 25/32-inch board is occasionally selected for architectural effect. In this case wide boards are generally used. Some of this siding is also beveled at the top of the back. This allows the boards to lie rather close to the sheathing, thus providing solid nailing.

Vertical siding.—Vertical siding is commonly used on the gable ends of houses, over entrances, and sometimes for large wall areas. The type used may be plain-surfaced matched boards, patterned matched boards, or square-edge boards covered at the joint with a batten strip.

Matched vertical siding should preferably not be more than 8 inches wide and should have 2 eightpenny nails not more than 4 feet apart. Backer blocks should be placed between studs to provide a good nailing base. The bottom of the boards should be undercut to form a water drip.

Batten-type siding is often used with wide square-edged boards, which, because of their width, are subjected to considerable expansion and contraction. The batten strips used to cover the joints should be nailed to only one siding board so that the adjacent board can swell and shrink without splitting the boards or the batten strip.

Plywood siding.—Plywood is often used in gable ends, sometimes around windows and porches, and occasionally as overall exterior-wall covering. The sheets are made either plain or with irregularly cut striations. It can be applied horizontally or vertically. The joints can be molded battens, V-grooves, or flush joints. Sometimes it is installed as lap siding. Plywood siding should be of exterior grade.

For unsheathed walls, the following thicknesses are suggested:

Minimum thickness (inch)	*Maximum stud space on center (inches)*
3/8	16
1/2	20
5/8	24

Treated siding.—Houses are often built with little overhang of the roof, particularly on the gable ends. This permits rainwater to run down freely over the face of the siding. Under such conditions water may work up under the laps in bevel siding or through joints in drop siding by capillary action and provide a source of moisture that may cause paint blisters and subsequent paint peeling.

A generous application of a water-repellent preservative to the back of the siding at the butt edge and to the face of the siding at the top edge would be quite effective in reducing capillary action with bevel siding. In the case of drop siding the treatment would be applied to the matching edges. Dipping the siding in the water repellent would be still more effective. The water repellent should be applied to all cut ends, at butt joints and where the siding meets door and window trim.

Installation of Siding

The spacing for siding should be carefully laid out before the first board is applied. The bottom of the board that passes over the top of the first-floor windows should coincide with the top of the window cap (fig. 69, *A*). To determine the maximum board spacing or exposure, deduct the minimum lap from the overall width of the siding. The number of board spaces between the top of the window and the bottom of the first course at the foundation wall should be such that the maximum exposure will not be exceeded. This may mean that the boards will have less than the maximum exposure.

Siding starts with the bottom course of boards at the foundation, blocked out as shown in figure 69, *C*. Sometimes the siding is started on a water table, which is a projecting member at the top of the foundation to throw off water. Each succeeding course overlaps the upper edge of the lower course. The minimum head lap is 1 inch for 4- and 6-inch widths and 1¼ inches for width over 6 inches.

The joints between boards in adjacent courses should be staggered as much as possible. Butt joints should always be made on a stud, or where boards butt against window and door casings and corner boards. The siding should be carefully fitted and be in close contact with the member or adjacent piece. Some carpenters fit the boards so tightly that they have to spring the boards in place. This assures a tight joint. Loose-fitting joints allow water to get behind the siding and thereby cause paint deterioration around the joints and also set up conditions conducive to decay at the ends of boards.

Types of nails.—Nails cost little compared with the cost of siding and labor, but the use of good nails is important. It is poor economy to buy siding that will last for years and then to fasten it with nails that will rust badly within a few years. Rust-resistant nails will hold the siding permanently and will not disfigure light-colored paint surfaces.

Two types of nails are commonly used with siding, one having a small head and the other a slightly larger head. The small-head casing nail is set (driven with a nail set) about 1/16 inch below the face of the siding. The hole is filled with putty after the prime coat of paint is applied. The large-head nail is driven flush with the face of the siding, with the head being later covered with paint. Ordinary steel-wire nails tend to rust in a short time and cause a disfiguring stain on the face of the siding. In some cases the small-head nails will show rust spots through the putty and paint. Noncorrosive nails (galvanized, aluminum, and stainless-steel) that will not cause rust stains are readily available (*24*).

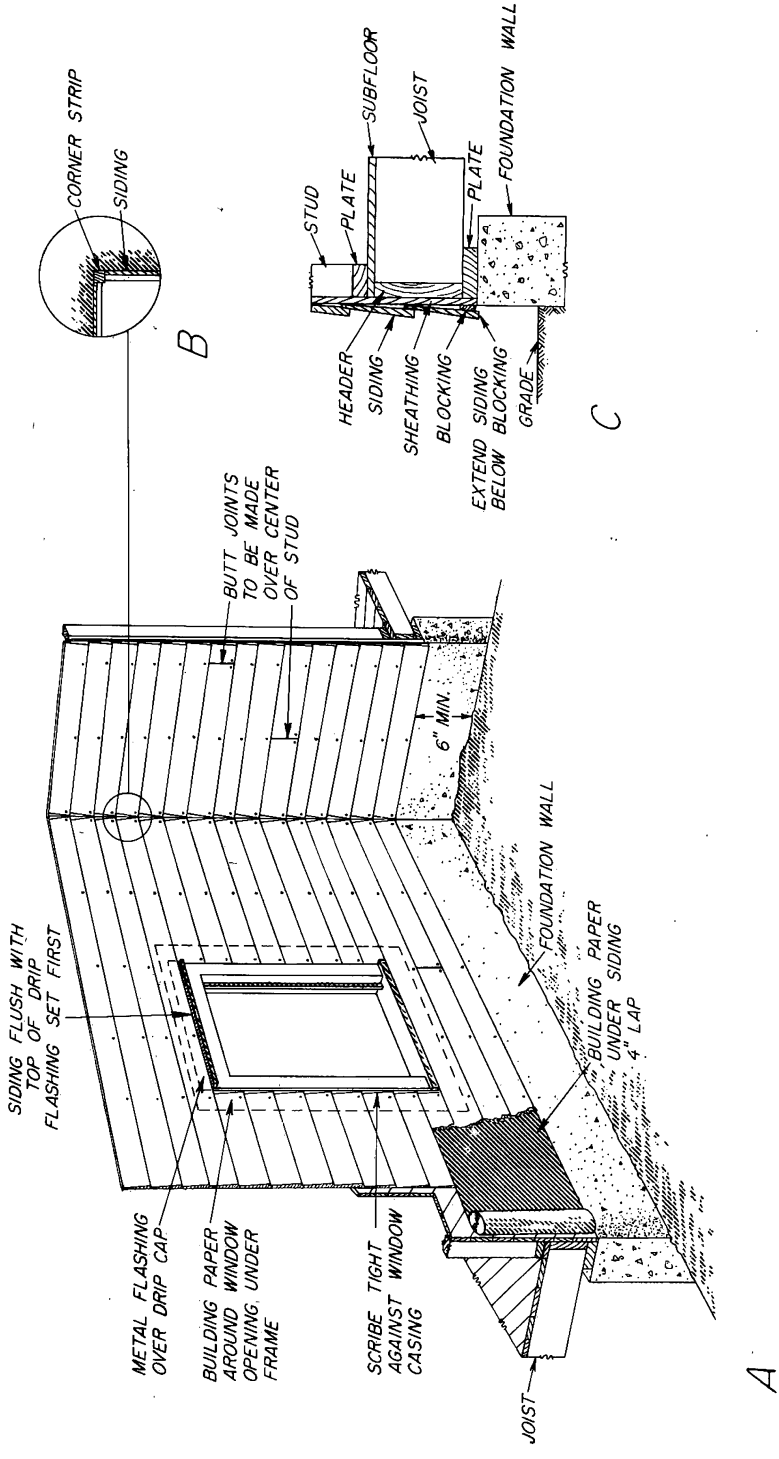

FIGURE 69.—Installation of siding. *A*, Method of application; *B*, corner treatment; *C*, starting course.

Bevel siding should be face-nailed to each stud with noncorrosive nails, the size depending upon the thickness of the siding and the type of sheathing used. For ½-inch siding over wood or plywood sheathing, use sixpenny nails; and over fiberboard or gypsum sheathing, use eightpenny nails. For ¾-inch siding over wood or plywood sheathing, use sevenpenny nails; and over fiberboard or gypsum sheathing, use ninepenny nails. The nail is generally placed about ½ inch above the butt edge, in which case it passes through the upper edge of the lower course of siding. Another method recommended for bevel siding by most associations representing siding manufacturers is to drive the nails through the siding just above the lap so that the nail misses the thin edge of the piece of siding underneath. The latter method permits expansion and contraction of the siding board with seasonal changes in moisture content. It thereby minimizes the tendency to cup or split that may occur where both edges of the board are nailed. Since the amount of swelling and shrinking is proportional to the width of the material, nailing above the lap is more important in wide siding than in narrow siding.

Drop siding.—Drop siding should be nailed to each stud with ninepenny noncorrosive nails. It is sometimes nailed with one nail in the width of the board, as shown in figure 68, *B*, where the nail is driven in about 1 inch above the butt edge. The top edge is held in place by the lap of the board above. Somewhat greater rigidity of the structure is obtained by using two nails (fig. 68, *C*, *D*), but the upper nail should be located near the midheight of the board with the upper part of the board free to swell or shrink with changes in moisture content.

Plywood siding.—Although there are a number of variations in use of plywood as a wall covering, in most cases it is applied vertically against the wall or in the form of lap siding. In vertical application, it may be used over sheathing or directly on the studs. Where applied over sheathing, ¼-inch-thick material may be used. If sheathing other than wood is used, install solid blocking, spaced not more than 2 feet 6 inches apart, between studs. For unsheathed walls, the thickness of the plywood should be not less than ⅜ inch for 16-inch stud spacing, ½ inch for 20-inch stud spacing, and ⅝ inch for 24-inch stud spacing. Vertical joints should always occur over studs. All horizontal joints should have solid blocking between studs.

After cutting and fitting, all edges should be protected with white lead paint prior to erection. All butt joints should be filled with mastic calking. Beveling the back edges prior to erection is recommended to provide a pocket to hold the mastic after erection. Nails should be hot-dipped galvanized or aluminum, flat headed, spaced not more than 6 inches apart on the edges of the sheet and 12 inches at intermediate supports.

Where plywood is applied as lap siding, bevel strips 2 inches wide should be provided back of the plywood at each stud bearing and at vertical joints. Mastic calking should be used in all vertical joints.

Corner treatment.—The method of finishing the wood siding at exterior corners is influenced somewhat by overall house design. Corner boards are appropriate to some designs and mitered joints to others.

Wood siding is commonly joined at the exterior corners (fig. 70, *A*, *B*, *C*) by (a) corner boards, (b) mitered corners, or (c) metal corners.

Corner boards (fig. 70, *A*) are used with bevel or drop siding and are generally made of nominal 1- or 1¼-inch material, depending upon the thickness of the siding. It may be either plain or molded, depending on the architectural treatment of the house. The corner boards may be applied vertically against the sheathing, with the siding fitted tightly against the narrow edge of the corner boards. The joints between the siding and the corner boards and trim should be calked or treated with a water repellent. Corner boards and trim around windows and doors are sometimes applied over the siding, a method that minimizes the entrance of water into the ends of the siding.

Mitered corners (fig. 70, *B*) must fit tightly and smoothly for the full depth of the miter. To maintain a tight fit at the miter it is important that the siding be properly seasoned before delivery and be stored at the site so as to be protected from rain. The ends should be set in white lead when the siding is applied, and the exposed faces should be primed immediately after it is applied. At interior corners (fig. 69, *B*) the siding is butted against a corner strip of nominal 1- or 1¼-inch material, depending upon the thickness of the siding.

Metal corners (fig. 70, *C*) are made of light-gage metals such as aluminum and galvanized iron, and are used with bevel siding as a substitute for mitered corners. They can be purchased at most lumber-

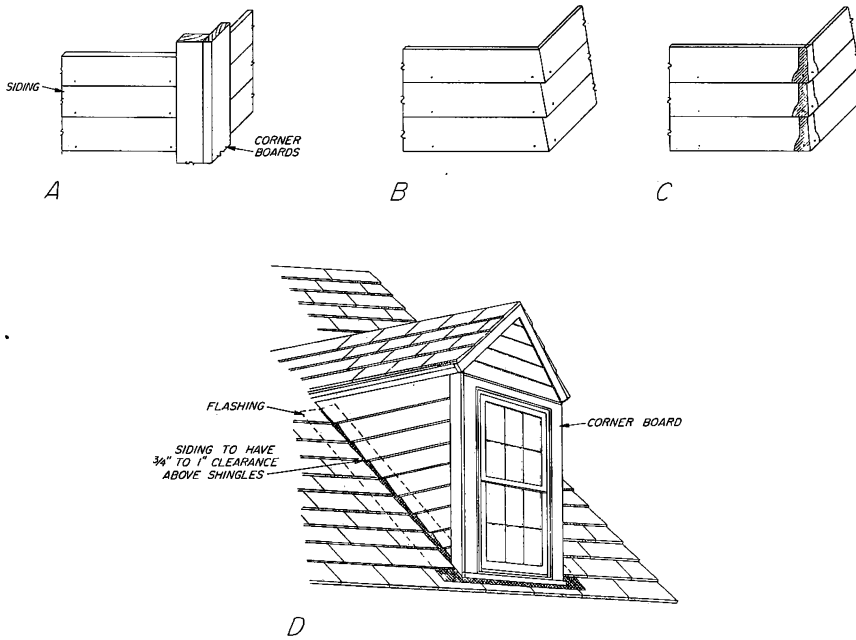

FIGURE 70.—Corner treatment for siding. *A*, Corner boards; *B*, mitered corner; *C*, metal corner; *D*, siding return on main roof, showing corner boards. Mitered corners and metal corners can also be used on the return, depending on the design.

yards. The application of metal corners takes less skill than is required to make good mitered corners or to fit siding to corner boards. Metal corners should be set in white lead paint.

Where siding returns against a roof the siding should not be fitted tight against the shingles, but should have a clearance of ¾ to 1 inch (fig. 70, *D*). Windblown water working back of the siding, potential cause of paint failure, cannot dry out quickly where there is a tight fit between the siding and shingles.

Wood Shingles

Wood shingles (*22*) (fig. 71) are widely used for wall covering, and a large selection of types is available, including special wall shingles in lengths of 16, 18, and 24 inches, prepainted or stained. Handsplit shingles are occasionally used, but the cost of this type limits its use.

The following weather exposures for shingle siding are recommended:

Maximum weather exposure

Shingle length (inches)	*Single course (inches)*	*Double course (inches)*
16	7½	12
18	8½	14
24	10	16

Shingles are usually separated into three grades. The first grade is composed of clear shingles, all heart, all edge grain. The second grade consists of shingles with clear butts and admits defects in that part of the shingle that will normally be covered in use. The third grade includes those that have defects other than permitted in the second grade.

Shingles are made in random widths varying in the No. 1 grade from 3 to 14 inches, with only a small proportion of the narrow width permitted in the grade. Shingles of a uniform width, known as dimension shingles, are also obtainable. The latter are cut uniformly to widths of 4, 5, or 6 inches, as may be specified. Shingles are blind-nailed about 1 inch above the butt edge (fig. 71, *A*).

To obtain architectural effect with deep shadow lines, shingles are frequently laid in what is called double-coursing (fig. 71, *B*, *C*). This is done by using a lower grade shingle under the shingle exposed to the weather. The exposed shingle butt extends about ½ inch below the butt of the under course. Where double-coursing is used, wider exposure to the weather is possible, as shown in the tabulation. Shingles with wide exposure should be butt nailed. Shingles may be staggered for rustic effect (fig. 71, *D*).

When shingles are applied over fiberboard or gypsum sheathing, horizontal 1- by 2-inch nailing strips should first be nailed to the studs, spaced apart on centers the same distance as the weather exposure chosen for the shingles, to provide a good base for nailing. Space the shingle courses the same way as described for siding (fig. 71, *C*).

Shingles should be applied with rust-resistant nails. At least a ¼-inch space should be allowed between shingles, and it is frequently recommended that no shingle should be laid more than 8 inches in width. Shingles wider than this should be sawed or split and nailed as two shingles.

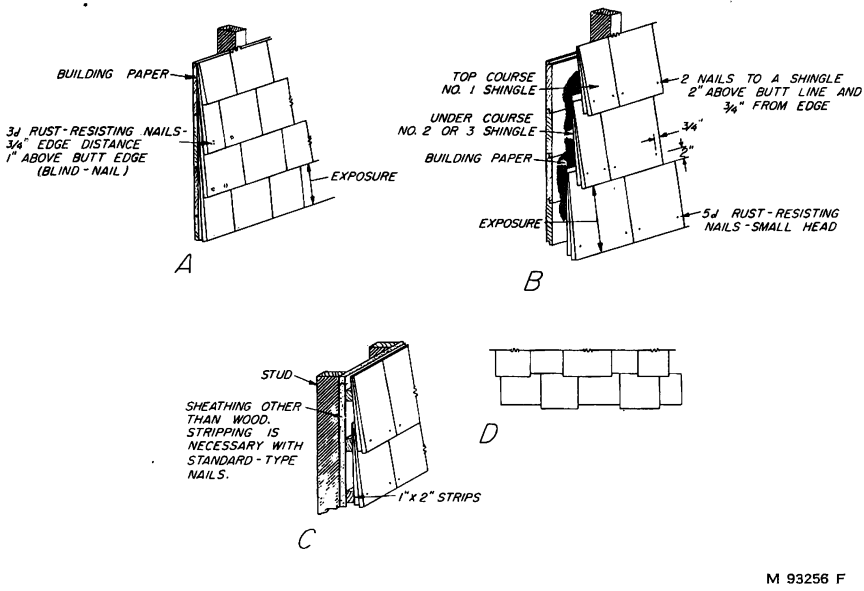

FIGURE 71.—Shingles for wall coverings. *A*, Single course, exposure will depend on length of shingle; *B*, double course; *C*, double course on wood strips; *D*, staggered shingles.

Asbestos-Cement Siding and Shingles

Asbestos-cement siding and shingles, which come in various sizes and colors, should be applied in accordance with the manufacturer's directions.

Wood sheathing should be used under asbestos-cement shingles and siding. The shingles or siding are laid over a waterproof paper applied over the sheathing. Noncorroding nails should be used and care should be taken in driving nails not to crack the shingles. Vertical joints should be flashed with 4-inch-wide strips of saturated felt laid under each joint.

The treatment of corners may be similar to those used for wood siding. However, in most cases, the manufacturers will suggest the type of corner treatment best suited for their products. The corners should be flashed with a wide strip of asphalt paper underlay applied vertically.

Stucco Side-Wall Finish

Stucco when properly used makes a good wall finish. It may be of natural cement color or colored as desired. Where stucco is used on houses more than one story high, balloon framing should be used in the outside walls. If platform framing is used, shrinkage of the joists and sills of the platform may cause an unsightly bulge or break in the stucco at that point.

Acceptable types of lath are (1) zinc-coated or galvanized expanded metal, (*a*) with large openings, 1.8 pounds per square yard, (*b*) with small openings, 3.4 pounds per square yard; (2) galvanized woven-wire fabric, (*a*) 18-gage wire, 1-inch maximum mesh, (*b*) 17-

gage wire, 1½-inch maximum mesh, (*c*) 16-gage wire, 2-inch maximum mesh; and (3) galvanized welded-wire fabric, (*a*) 16-gage wire, 2- by 2-inch mesh with waterproof paper backing, (*b*) 18-gage wire 1- by 1-inch mesh without paper backing.

The lath used should be held at least ¼ inch away from the sheathing so that the stucco can be forced through the lath and embedded completely. Galvanized furring nails, metal furring strips, or self-furring lath are available for spacing as described. Nails should penetrate wood at least ¾ inch. Where fiberboard or gypsum sheathing is used, the length of the nail should be such that at least ¾ inch penetrates into the wood stud.

Stucco Plaster

The plaster should be 1 part Portland cement, 3 parts sand and hydrated lime equal to 10 percent of cement by volume, or it may be a prepared Portland-cement stucco used and applied according to the manufacturer's instructions. It should be applied in 3 coats to a total thickness of 1 inch. The first coat should be forced through the lath and worked so as to embed the lath at all points. Keep fresh stucco shaded and wet for 3 days. Do not apply stucco when the temperature is below 40° F. It sets very slowly, and there may be a hazard of freezing before it has set.

Masonry Veneer

Brick or stone veneer is often used for part or all of the wall covering over wood frame walls. For detailed information regarding the installation of masonry veneer, see figure 13.

FRAMING DETAILS FOR PLUMBING

It is sometimes possible to frame a house so that very little cutting of joists is necessary during the installation of plumbing. This is especially true of one-story houses in which most of the connections are made in the basement. In two-story houses, however, it is sometimes necessary to provide for cutouts of joists and other framing members to accommodate supply and waste pipes (*57*).

Stack-Vent Walls

The wall behind the water closet in the bathroom or elsewhere is ordinarily used for the soil stack and stack vent, for water connections, and for vent and waste lines. When 4-inch cast-iron bell pipe is used for the soil stack and stack vent, it is necessary to use at least 2- by 6-inch studs to conceal the pipe hubs (fig. 72, *A*).

The building codes in some cities allow the use of 3-inch galvanized-iron pipe for venting purposes in one-story houses. When the 3-inch pipe is used, the stack wall may be made of 2 by 4 dimension material. In that case, however, it is necessary to reinforce the top plates of the wall because they may be cut through for the vent pipe. A 2- by 4-inch scab, cut out to a half circle, may be used on each side of the top plate (fig. 72, *B*). These scabs should be well nailed to the plates and should extend over two studs, as shown. In some cases the reinforcement is made with small angle irons.

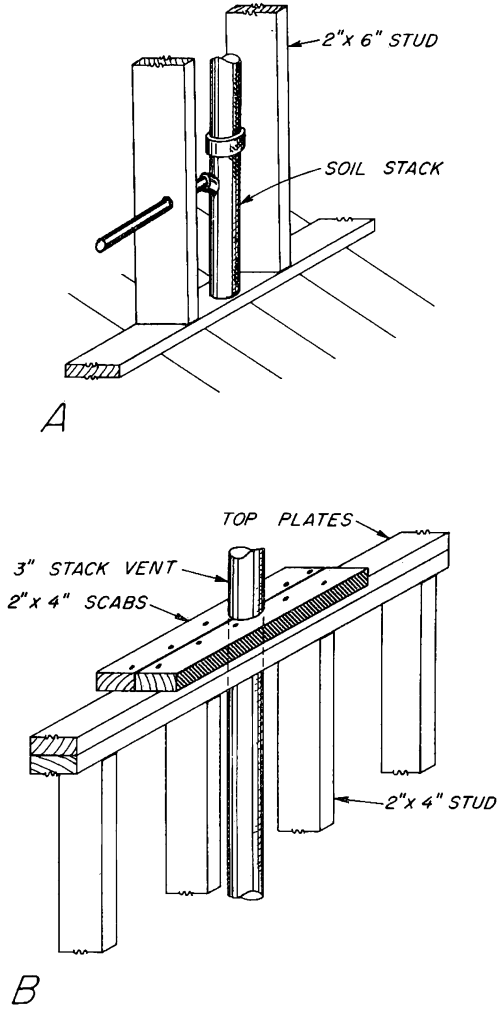

FIGURE 72.—Stack-vent walls. *A*, 4-inch cast-iron stack vent in wall; *B*, 3-inch pipe for stack vent.

Bathtub Supports

A bathtub is so heavy that floor joists should be arranged to carry the load without excessive deflection. If deflection is too great, an opening may form between the plaster or tile line and the top of the tub. Joists should be doubled at the outer edges of the tub (fig. 73). The intermediate joist should be spaced to clear the drainpipe. Support blocks or metal hangers are used to support the inner rim of the tub.

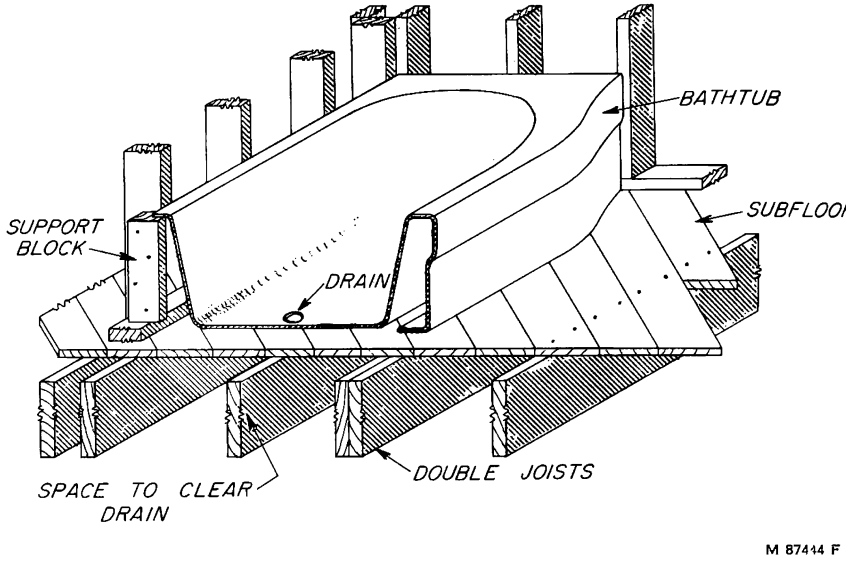

FIGURE 73.—Bathtub supports.

Cutting of Framing

Pipe notches.—Notching (*57*) of the top or bottom of the joists for piping should not be more than one-sixth of the joist depth and should be located only in the end third of the span (fig. 74, *A*, *B*).

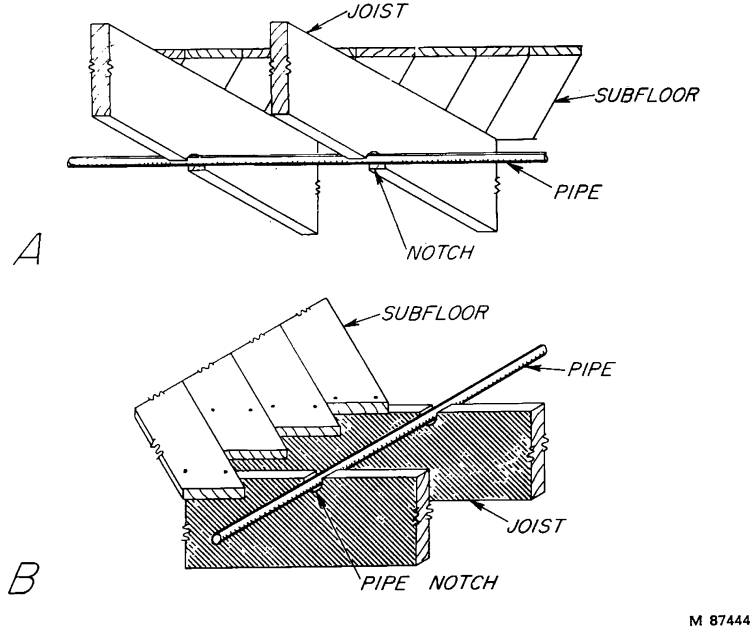

FIGURE 74.—Notching of joists for pipe. *A*, At bottom; *B*, at top.

Soil-stack framing.—Where soil stacks or large pipes are placed between floors, it is usually necessary to frame out the joists when the drainpipe runs horizontally at right angles to the joists. Headers are installed between doubled stringers or joists (fig. 75). A block support may be used under the pipe and between the headers.

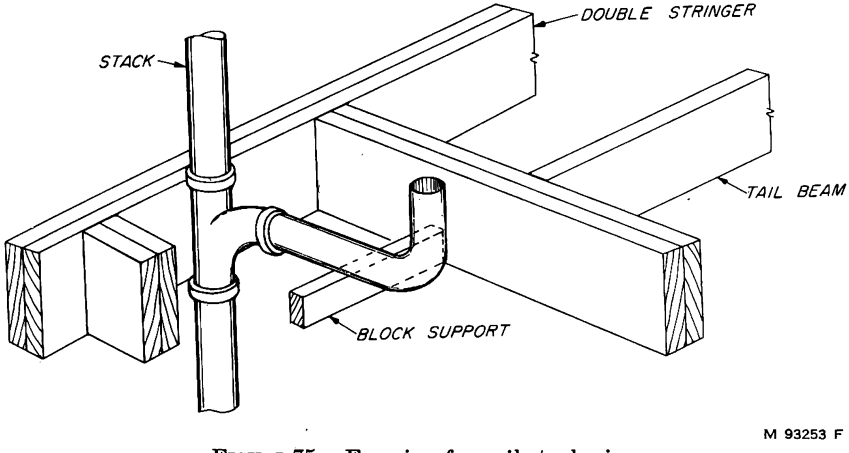

FIGURE 75.—Framing for soil-stack pipes.

Drilled holes in joists.—Holes may be bored in joists if the diameter is no greater than 2½ inches and the edge of the hole is not less than 2 inches from the top or bottom edge of the joist (fig. 76). This usually limits the joist size to a 2 by 8 or larger member. This method of installation is suitable where joist direction changes and the pipe can be inserted from the area where joists are parallel to the pipe length.

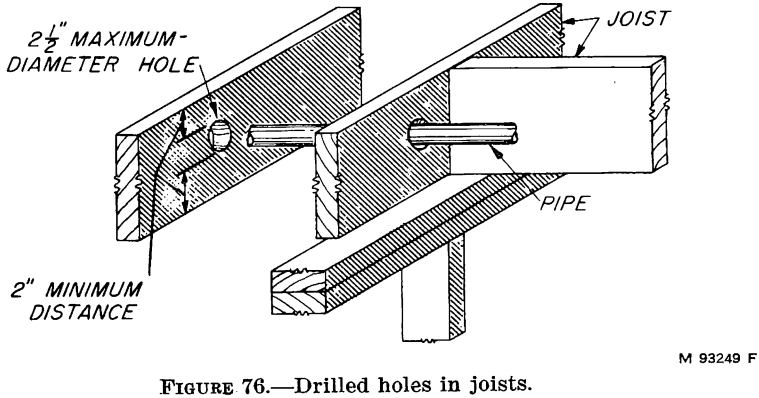

FIGURE 76.—Drilled holes in joists.

Ventpipe connections.—Frequently in present-day construction a large window above the sink places a heavy load on the framing studs. These studs should not be notched for the ventpipe. Where cabinets are available to conceal the piping, the pipe should be carried on the inside wall line (fig. 77). Where the vent must be placed in the wall, holes should be bored in the studs for the pipe.

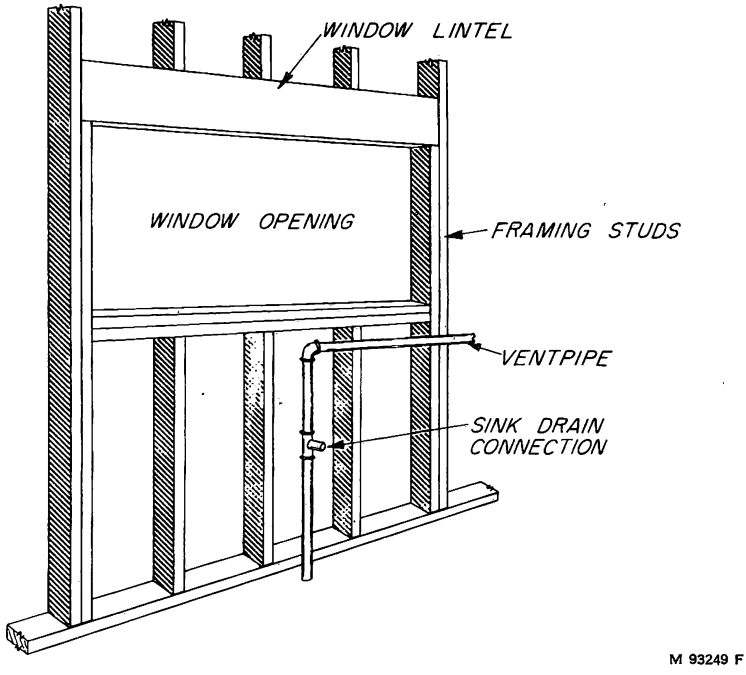

FIGURE 77.—Ventpipe connection.

FRAMING DETAILS FOR HEATING SYSTEMS

There are many systems used to heat a house, from a multi-controlled hot-water or steam system to a simple floor furnace. There are a number of fuels used, the most common of which are coal, oil, and gas. Some systems commonly used are as follows:

Warm air (requires cold-air return).
1. Gravity system.
2. Forced-air system.

Hot water (gravity or forced system).
1. Radiator, convector, or baseboard heating.
2. Floor or ceiling radiant heating.

Steam or vapor systems.

Regardless of the type of heating system used, it must be designed for proper capacity and performance. In general, these two factors are fulfilled by a reputable heating firm.

Where warm-air heating systems are used, the ducts for warm-air supply and cold-air returns must often be carried in a wall or through floors. Consideration must be given to construction and framing of girders, joists, and studs to suit the requirements of the duct system.

For steam and hot-water systems having radiators or baseboard units, no particular framing problems are involved. Wall convectors require recessed pockets in the walls. Radiant-heating systems require provision for pipe space in accordance with the system selected.

Warm-Air Systems

The installation of ducts for a forced-warm-air system usually requires the removal of the soleplate and the subfloor at the duct location. Supply ducts are made to dimensions that allow them to be placed between the studs.

Walls and joists are normally located so that they do not have to be cut when heating ducts are installed. This is especially true when partitions are at right angles to the floor joists.

When a load-bearing partition requires a doubled parallel floor joist as well as a warm-air duct, the joists are ordinarily spaced apart to allow room for the duct (fig. 78). This will eliminate the need for excessive cutting of framing members or the use of intricate pipe angles.

Cold-air returns are generally located in the floor between joists or in the walls at floor level (fig. 79). They are sometimes located in outside walls, in which case they should be lined with metal. Unlined ducts in exterior walls have been known to be responsible for exterior-wall paint failures.

The elbow from the return duct below the floor is usually placed between floor joists. The space between floor joists when enclosed with sheet metal serves as a cold-air return (fig. 79). Other cold-air returns may connect with the same joist space.

Register collars are located and fastened so that they are flush with the finished wall surface (fig. 78).

Floor and wall furnace.—Another method of heating often used in small houses, or in houses located in milder climates, is the floor or wall furnace. This is generally a gravity air system that is compact and complete in itself.

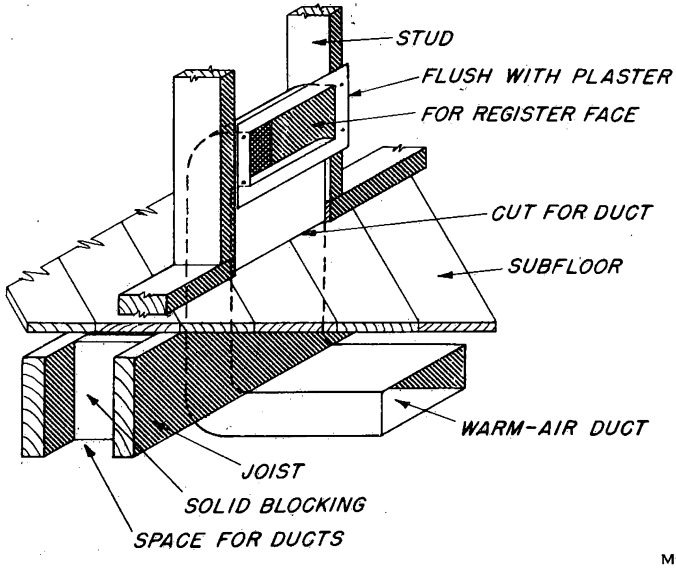

FIGURE 78.—Spaced joist for warm-air duct.

304696 O—55——7

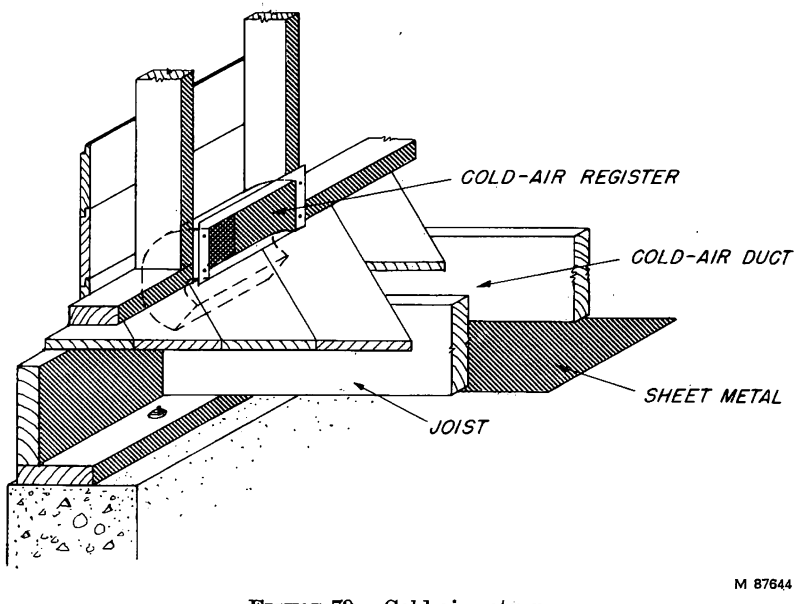

FIGURE 79.—Cold-air return.

The floor furnace, whether hung from the floor joists or mounted on a concrete base in the crawl space, requires that the floor be framed to carry or to contain the unit (fig. 80). Headers are used, and stringers are ordinarily doubled to carry the load.

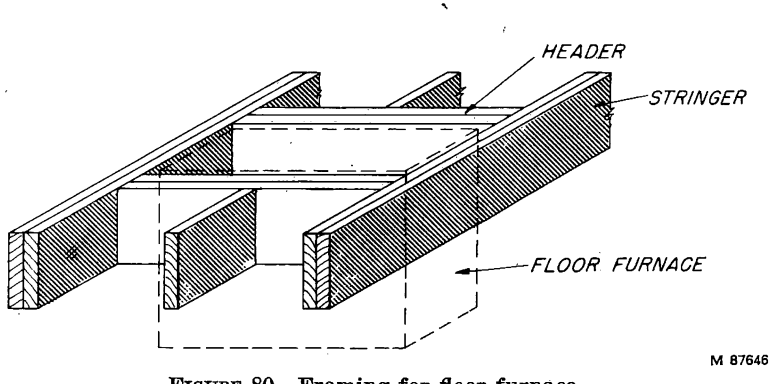

FIGURE 80—Framing for floor furnace.

The wall furnace is a narrow unit, usually of the gas-burning type, that fits in the wall (fig. 81). These units are ordinarily used to serve rooms on each side of the wall. Cold air enters at the bottom of face grills, is heated, and reenters the room or rooms at the top of the grill.

The wall area directly above the unit should have a lintel or header to carry the wall load.

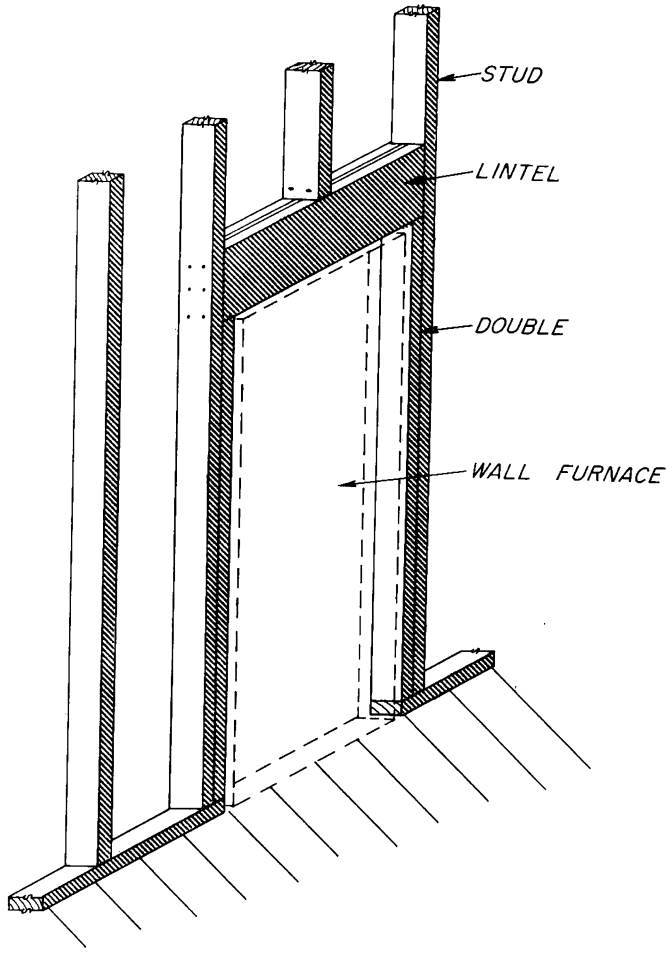

FIGURE 81—Framing for wall furnace.

Hot-Water or Steam Systems

Where the heating system requires only small pipes for a supply-and-return system, the drilling of holes requires little planning in the structural framing.

When semiconcealed or recessed radiators or convectors are used, it is necessary to frame out for these during wall-framing operations. A header is used over the top of the opening much as a window is framed (fig. 82). Openings that are greater than 2 feet wide should have a vertical nailing member for both the sheathing and the plaster base. The space between sheathing and plaster should be insulated if possible. Metal corner beads are placed around the opening when a plaster finish is used.

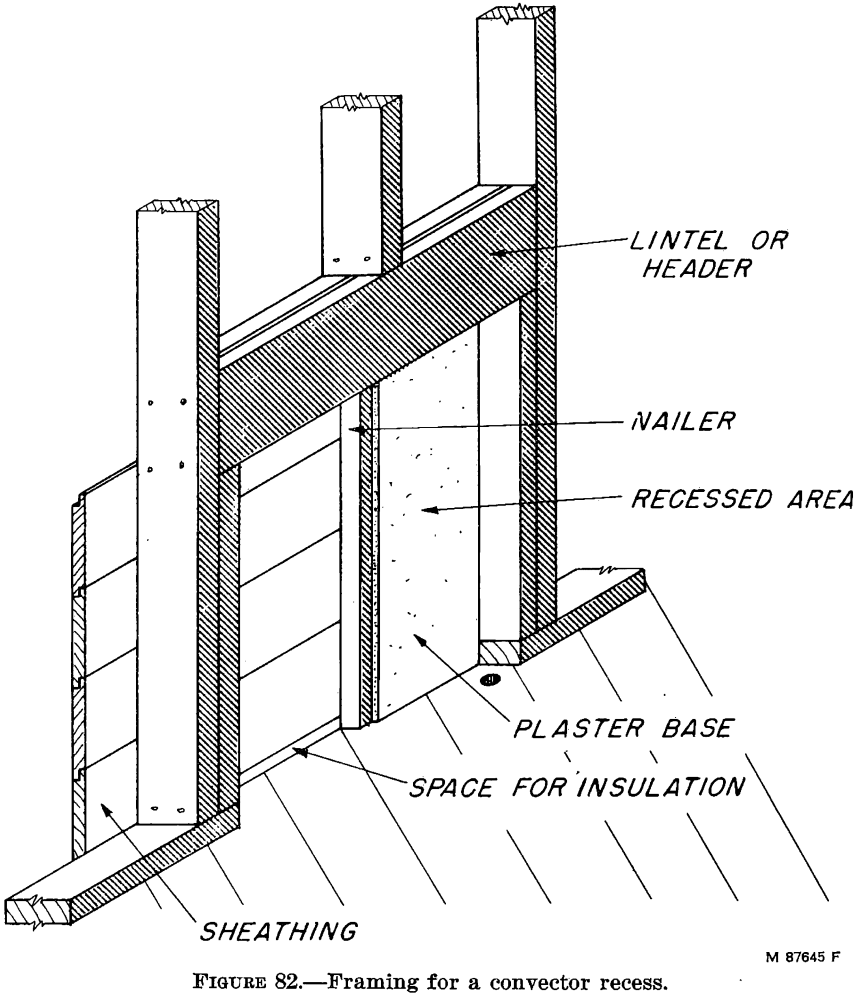

FIGURE 82.—Framing for a convector recess.

Radiant-Heating Systems

Radiant-heating systems are those in which the heating elements are located in the floor, the walls, or the ceiling of a room, with those in the floor or ceiling being the most common. The flooring or the plaster is heated, which in turn heats the room by radiation.

Location of pipes.—Pipes, either copper, steel, or wrought-iron, are ordinarily used for radiant heating. One method of radiant floor heating used on wood floors utilizes sleepers over the subfloor (fig. 83, *A*). The pipes are laid between the sleepers, and the finish floor is laid on and is fastened to the sleepers. Figure 19 shows a concrete slab with radiant-heating pipe embedded in the floor.

Pipes in ceiling.—One method of ceiling heating consists of metal lath securely nailed to the joists with the pipes attached to the lath by

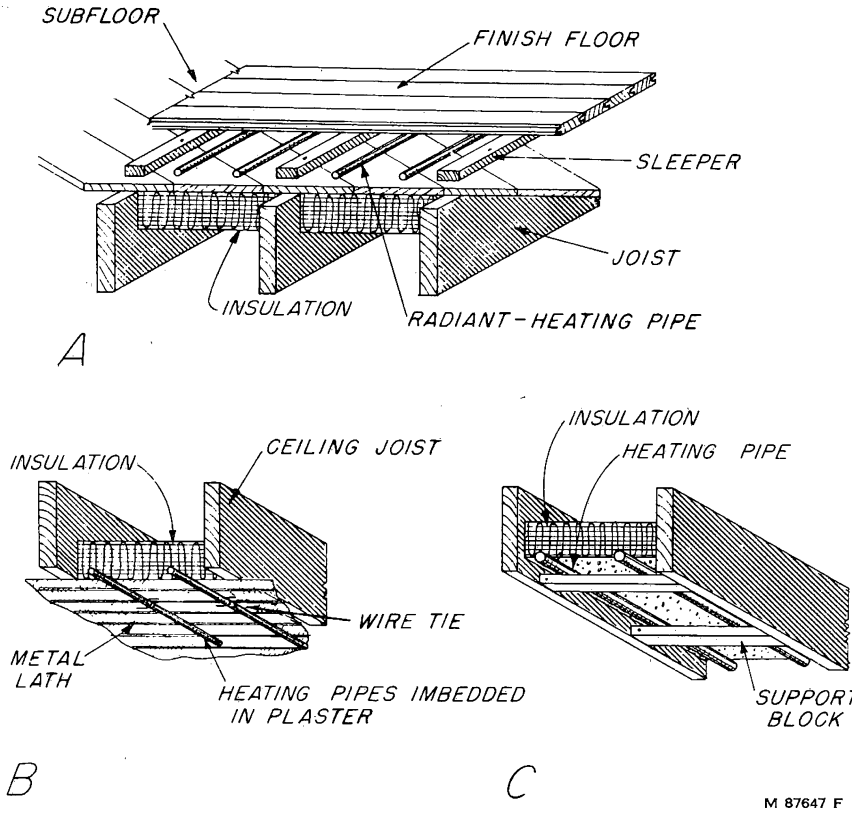

FIGURE 83.—Pipe locations for radiant heating. *A*, On subfloor; *B*, on metal lath on ceiling; *C*, on supports in ceiling joist space.

wires (fig. 83, *B*). Plaster covers the pipes. If the space above the pipes is an attic space, insulation is placed in the joist space. This construction usually requires a larger joist than that used for ordinary construction.

Another method of installation consists of support blocks nailed between or on the under sides of the joists (fig. 83, *C*). The pipes rest on these blocks, and ceiling finish may consist either of plaster or of dry-wall finish.

WIRING

House wiring for electrical services (*29*) is usually started some time after the house has been closed in. The initial phase of wiring is termed "roughing in." It includes the installation of conduit or cable and the location of switch, light, and outlet boxes with wires ready to connect. This roughing-in work is done before the lath is applied and ordinarily before the insulation is placed in the walls or ceilings. The placement of the fixtures and the switches is done after plastering.

The types of wiring used are usually established by local and State codes and should meet the requirements of the local public-utility regulations and of the Fire Underwriters' Laboratory. The number of circuits and the loads on each circuit are also thus controlled.

Wiring Systems

The wiring systems that may be used in houses, include (1) open wiring on insulators, (2) concealed knob and tube work, (3) armored cable, (4) nonmetallic sheathed cable, (5) service-entrance cable, (6) nonmetallic waterproof wiring, (7) surface metal raceway, and (8) metal conduit. Local codes may prohibit the use of one or more of these systems. Where codes permit, nonmetallic sheathed cable is the wiring method most commonly used when economy is of primary importance. Wiring methods are discussed in detail in Housing and Home Finance Agency Technical Bulletin No. 13 (*5, pp. 17–28*).

Box Location

Because the location of switches and convenience outlets is important, the wiring plans should be studied so that all needed parts are included without need for later inclusion or relocation.

Switches

Switches (*36*) are commonly located just inside the door of a room so that they may be easily reached upon opening the door. Switches may service a convenience outlet for a table or a floor lamp as well as the usual ceiling or wall lights.

It is common practice to locate the switch boxes about 4 feet 6 inches above the floor. It is, however, the opinion of many people that the switch should be located at the approximate height of the door knob or about 3 feet 2 inches above the floor. The location should be left to the desire of the owner. Switches or outlets at kitchen-counter walls are usually located about 4 to 6 inches above the counter.

Multiple-control switches are convenient in many locations so that lights may be controlled from more than one switch. A living-room light could have a switch near the outside-entrance door and another at inner doors leading to the kitchen or to bedroom hallways. In two-story houses three-way switches should be provided at the bottom and at the top of the stairway for both first floor and second floor lights. Basement lights may be provided with switches at the head and foot of the stairs.

Outlets

A study of the plans should be made with reference to the probable location of floor and desk lamps, radio and television equipment, electric clocks, toasters, electric heater, garbage-disposal units, hot-water heaters, washing machine, heating plant, and perhaps powered workshop equipment, so that outlets may be conveniently located. After

marking the anticipated outlets on the plan, add additional outlets to provide at least one in each 10 to 12 feet of wall unbroken by a doorway and one in each separate small wall space 3 feet or more in length. It is common practice to locate the outlets 15 to 30 inches above the floor, but the location should be that which is best for the unit it serves.

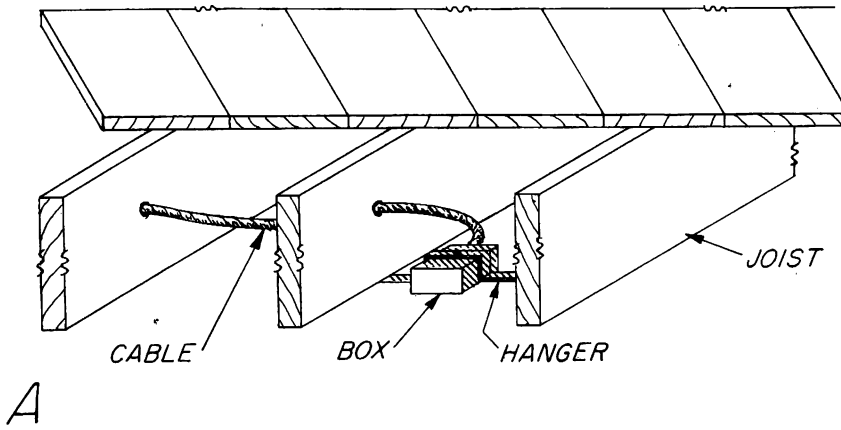

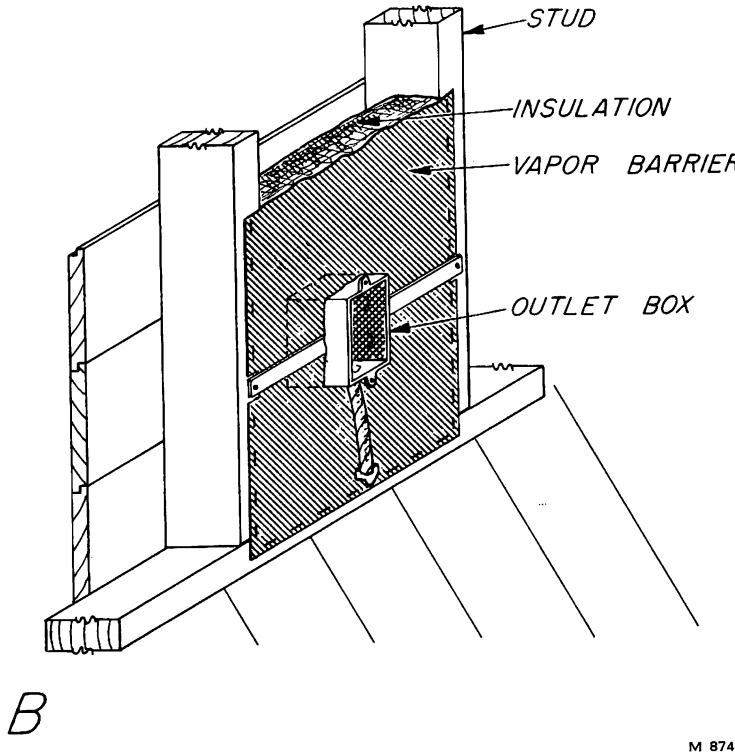

FIGURE 84.—Box location. *A*, In joists; *B*, in insulation.

Box Installations

Where switches or convenience outlets are located in exterior walls, the insulation is placed behind the box. The outline of the box is marked on the vapor barrier, which is then carefully cut out along the outline with a sharp knife so that the barrier paper will fit tightly around the box (fig. 84, *B*).

Cable- or conduit-size holes may be drilled in studs without greatly affecting their strength, but in joists such holes should be located at or slightly above the center (fig. 84, *A*). Holes should be kept at sufficient distance from the edge so that nails used in attaching lath, finish, or flooring will not penetrate to the cable.

INSULATION

All materials used in the construction of enclosing walls, roofs, and floors of dwellings and enclosed air spaces offer some resistance to the transfer of heat from the warm side to the cold side. Materials used may be suited to serve as sheathing or as wall coverings and at the same time have low resistance to heat transfer. The addition of material high in resistance to heat transfer, namely insulation, reduces heat movement through the enclosing surfaces and thereby improves comfort conditions and, in cold climates, materially reduces fuel consumption. Fuel savings effected will return the added cost of the insulation in a relatively short time. Average outside design temperature zones of the United States are shown in figure 85.

Commercial insulation is manufactured in a variety of forms and types, of which each has advantages for specific uses but none of which is best for all applications. The various types can be grouped into the following classes: (1) flexible, (2) fill, (3) reflective, and (4) rigid.

The thermal properties of most building materials are known, and the rate of heat flow or coefficient of transmission for most combinations of construction can be calculated (*1, pp. 97–139*; *43*). This coefficient of transmission, or U-value, represents the amount of heat expressed in British thermal units transmitted in 1 hour through 1 square foot of surface per 1° F. difference in temperature between air on the warm side and the air on the cold side of the construction unit. The insulating value of the wall (U-value) will vary with different types of construction, with materials used in construction, and with different types and thicknesses of insulation. Comparisons of U-values may be made and used to evaluate different combinations of materials and insulation on a basis of overall heat loss, potential fuel savings, influence on comfort, and cost of installation (*30*, *43*).

Air spaces add to the total resistance of a wall section to heat transmission, but an air space is not so effective as it would be if it were filled with an insulating material. Great importance is frequently given to dead-air spaces in speaking of a wall section. Actually, the air is never dead in cells where there are differences in temperature on opposite sides of the space, because the difference causes convection currents.

Information regarding the calculated U-values for typical constructions with various combinations of insulation may be found in Forest Products Laboratory Report R1740 (*43*); for side walls, in table 1; for ceilings, in table 3; and for pitched roofs, in table 4.

Flexible Insulation

Flexible insulation is manufactured in two types: (1) blanket or quilt, and (2) batt (*30*). Blanket insulation (fig. 86, *A*) is generally furnished in rolls or strips of convenient length and in various widths suited to standard stud and joist spacing. It is obtainable in thicknesses of 1, 1½, 2, and 3 inches. It is made of wood or vegetable fibers or of mineral wool and is generally enclosed in paper covers with tabs on the side for attachment. The covering sheet on one side may be intended to serve as a vapor barrier. Batt insulation (fig. 86, *B*) is made of a similar fibrous material preformed to a definite thickness, generally 2 or 3½ inches, and is in widths to suit 16-inch stud spacing and in 24- and 48-inch lengths. It is supplied both with and without a paper facing.

Fill Insulation

Fill insulation (fig. 86, *C*) is a material that may be poured or blown into open spaces. It may be a granular material, or it may be composed of small, detached clusters of fiber made of mineral wool.

Fill insulation is suited for use over level ceilings below unheated attics. It is also used in side walls of existing houses that were not insulated during construction. Where no vapor barrier was installed during construction, suitable paint coatings as described on page 109 should be used for vapor barriers when blown insulation is added to an existing house.

Reflective Insulation

Most materials reflect some radiant heat, and some materials have this property to a very high degree (*1, pp. 97–139; 30*). Such materials can be used in enclosed stud spaces, in attics, and in similar locations to retard heat transfer by radiation, in which case the material is referred to as reflective insulation.

Reflective insulation consists of sheet material with reflective surfaces on one or both sides. The reflective surfaces may be aluminum foil, specially treated surfaces of sheet steel, or certain types of coatings generally applied over a paper base. It is used in stud spaces or other locations where the reflective surface faces an air space. Where a reflective surface contacts another material, the reflective properties are lost and the material has no insulating value.

Reflective insulation, foil-type, is sometimes applied to blankets and to the stud-surface side of gypsum lath. Metal foil suitably mounted on some supporting base makes an excellent vapor barrier. One type of reflective insulation is shown in figure 86, *D*, and includes air spaces between the outer sheets.

Rigid Insulation

Rigid insulation (fig. 86, *E*) is a fiberboard material made from processed wood, sugarcane, or other vegetable products. These insulating boards are made in large sheets of low density and combine strength with heat- and sound-insulating properties. They are made

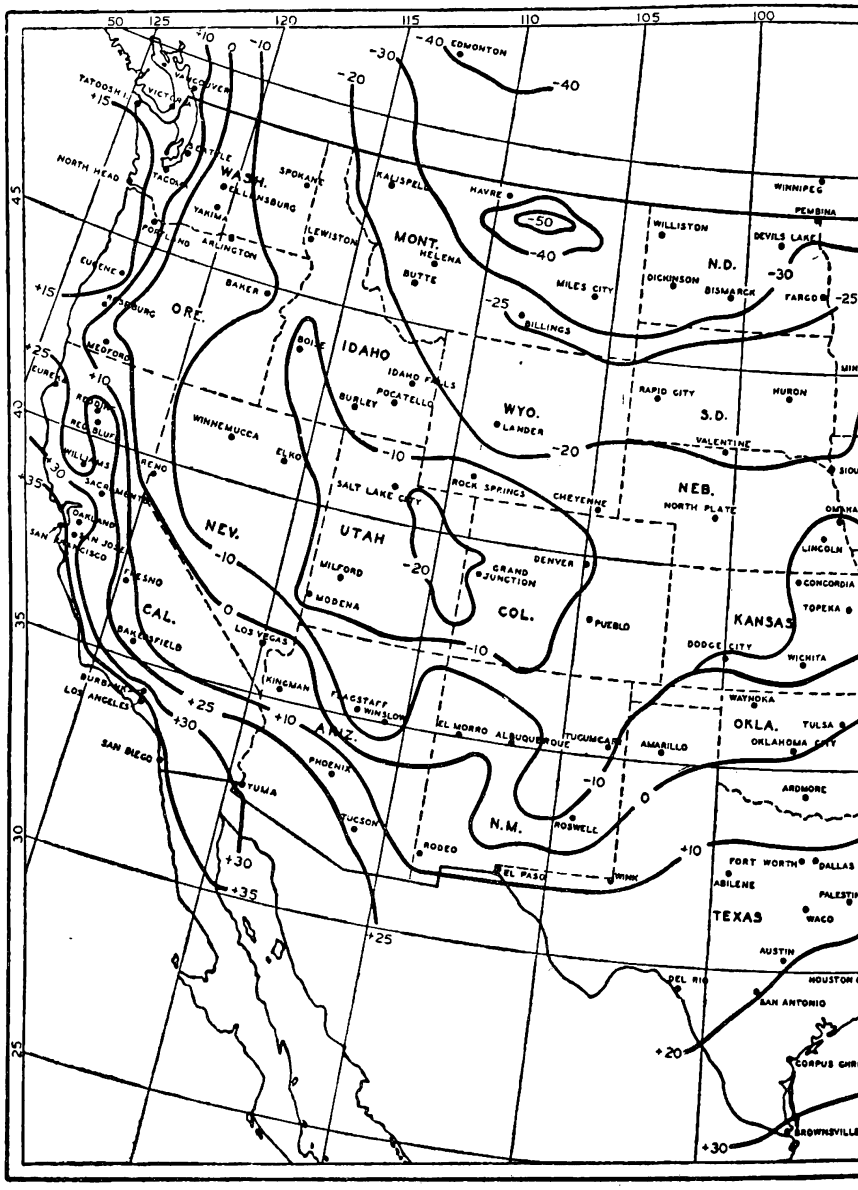

FIGURE 85.—Average outside design

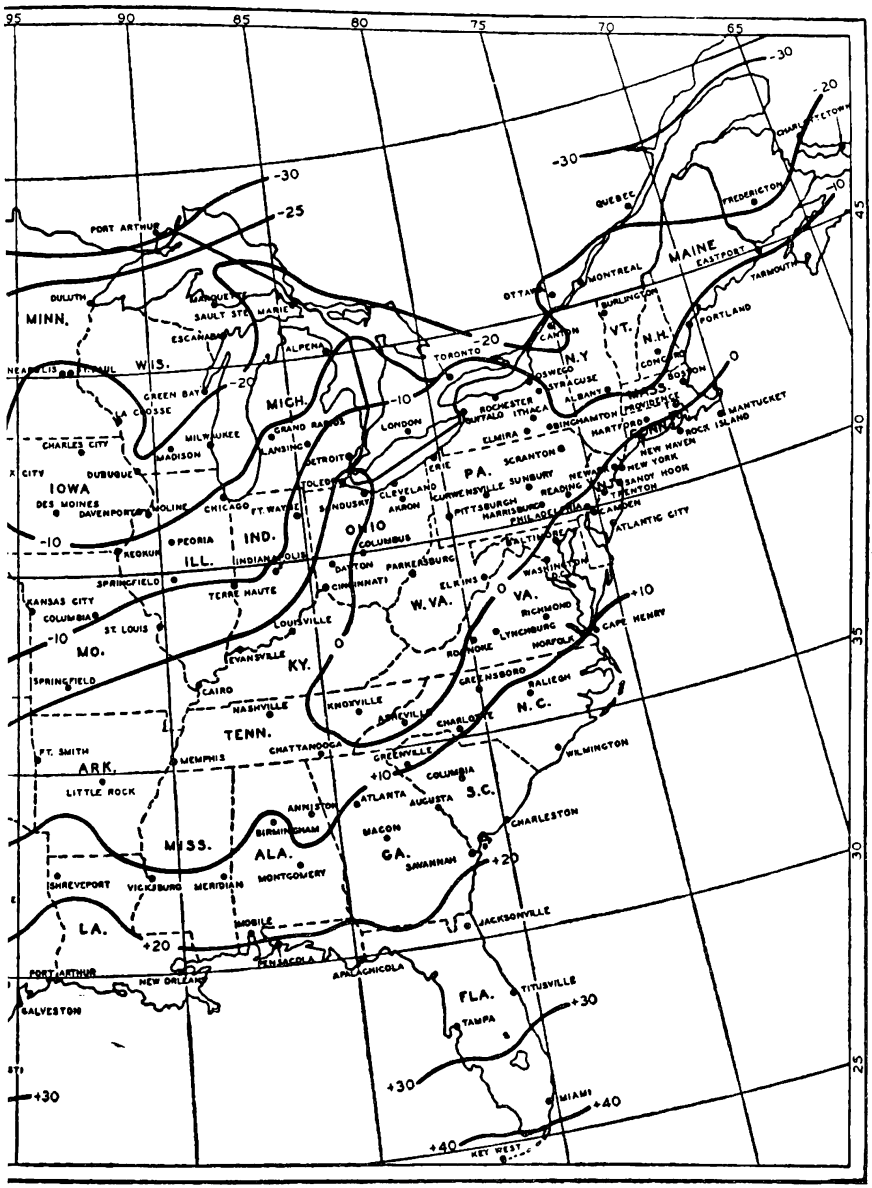

M 73372 F

temperature zones of the United States.

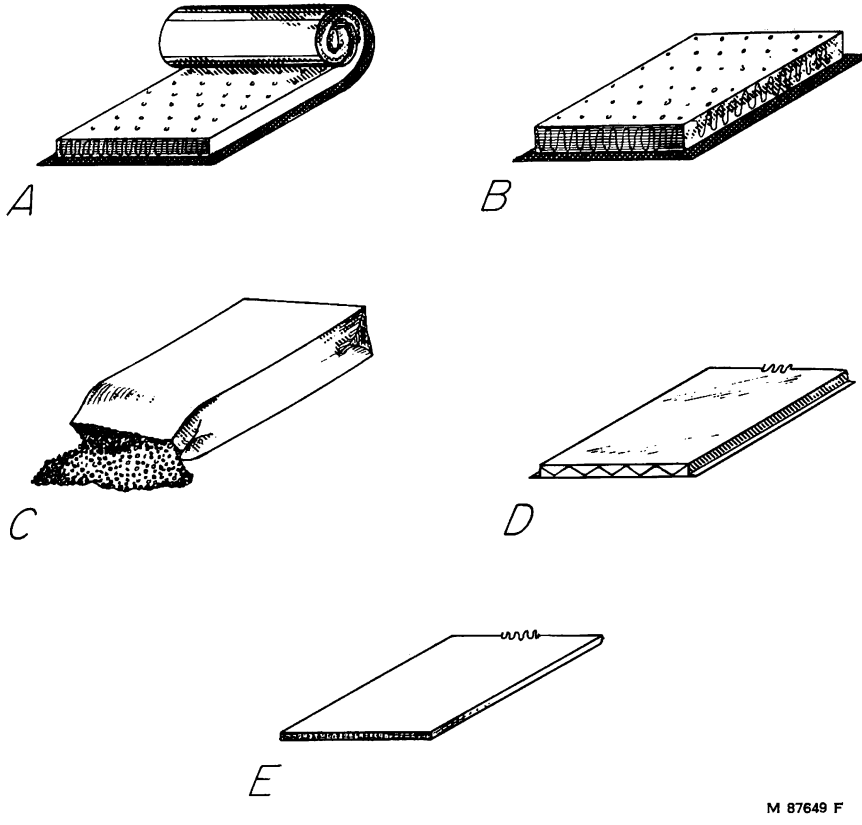

FIGURE 86.—Types of insulation. *A*, Blanket; *B*, batt; *C*, fill; *D*, reflective (one type); *E*, rigid.

in a variety of sizes and finishes. In houses they are widely used for sheathing and as a plaster base for the inside surface of exterior walls and of ceilings. The sheathing board is made in two thicknesses, ½ and 25/32 inch. It is made in sheets 2 by 8 feet for horizontal application and 4 by 8 feet or longer for vertical application. Lath are made in 2 thicknesses, ½-inch and 1-inch, in sheets 16 by 48 inches. Some lath are supplied with an asphalt coating intended to serve as a vapor barrier. Rigid insulation can also be obtained in decorative units for insulating walls and ceilings.

Miscellaneous Insulating Materials

There are, of course, insulating materials that do not fit into the classifications described, such as (1) confettilike material mixed with adhesive and sprayed on the surface to be insulated, (2) multiple layers of corrugated paper, (3) shredded wood fiber bonded with magnesite cement, (4) vermiculite bonded with asphalt, and (5) mineral wool preformed in boards or blocks and bonded with resins or other adhesives.

Where to Insulate

To reduce heat loss from the house during cold weather, all walls, ceilings, roofs, and floors that separate heated from unheated spaces should be insulated.

Insulation should be placed on all outside walls and in the ceiling (fig. 87, *A*) (*30*, *43*). In houses involving unheated crawl spaces, insulation should be placed between the floor joists. If a bulk type of insulation is used, it should be well supported by slats and a galvanized mesh wire or by a rigid board. Reflective insulation is often used for insulation of crawl spaces. Crawl spaces, as well as attic spaces, should be ventilated. A ground cover of roll roofing may also be placed on the soil of crawl spaces to decrease the moisture content of the space.

In 1½-story houses insulation should be placed along all areas that are adjacent to unheated areas (fig. 87, *B*). These include stairways, dwarf walls, and dormers. Provisions should be made for ventilation of the unheated areas.

Where attic storage space is unheated and a stairway is included, insulation should be used around the stairway as well as in the first-floor ceiling (fig. 87, *C*). The door leading to the attic should be weather-stripped to prevent heat loss. Walls adjoining an unheated garage or porch should be insulated.

In flat or low-pitched houses (fig. 87, *D*) insulation should be used in the ceiling area with sufficient space allowed above for a clear ventilating area between the joists. Insulation should be used along the perimeter of houses built on slabs. A vapor barrier should be included under the slab.

Insulation can be used effectively to improve comfort conditions within the house during hot weather. Those surfaces exposed to the direct rays of the sun may attain temperatures of 50° F. or more

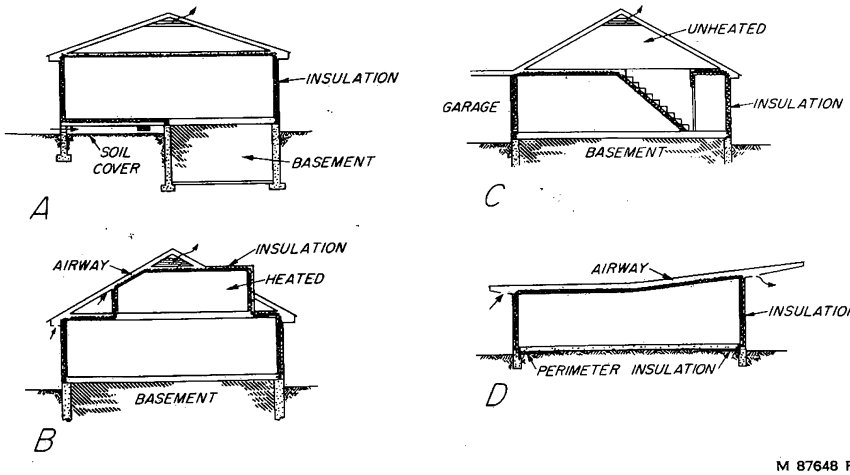

FIGURE 87.—Emplacement of insulation. *A*, In walls, floor, and ceiling; *B*, in 1½-story house; *C*, at attic door; *D*, in flat roof.

above shade temperature and, of course, tend to transfer this heat towards the inside of the house. Insulation in roofs and walls retards the flow of heat and, consequently, less heat is transmitted through such surfaces.

Where any system of cooling hot-weather air is used, insulation should be used in all exposed ceilings and walls in the same manner as for preventing heat loss in cold weather. Of course, where cooling is used, the windows and doors would be kept closed during periods when outdoor temperatures are above inside temperatures. Windows exposed to the sun should be shaded with awnings.

Ventilation of attic and roof spaces is an important adjunct to insulation. Without ventilation, an attic space may become very hot and hold the heat for many hours (*25, pp. 29–46*). Obviously more heat will be transmitted through the ceiling when the attic temperature is 150° F. than if it is 120° F. Ventilation methods suggested for protection against cold-weather condensation apply equally well to protection against excessive hot-weather roof temperatures.

Installation of Insulation

Blanket insulation should be placed between framing members so that the tabs lap all edges, including both bottom and top plates (fig. 88, *A*) (*15*). Where the vapor barrier on the insulation does not cover the framing member, a vapor-barrier paper should be used over these unprotected areas (see figure 88, *A* for example of vapor barrier covering the top plate). A hand stapling machine is usually used to fasten insulation tabs and vapor barriers in place. Figure 88, *A*, *A–A* shows the air space formed.

Batt insulation (fig. 88, *A*) is also placed between framing members (studs or joists) and is fastened with staples. Because of the shorter lengths of the batts, they should be placed so that the barriers lap each other and the lap should be sealed. When batts do not include a vapor barrier, the barrier should be stapled to framing members from bottom to top plate.

Reflective insulation, when used in a single-sheet form should be placed so as to divide the space formed by the framing members into two approximately equal spaces. Some reflective insulations include air spaces and are furnished with nailing tabs. This type is fastened in place much like blanket insulation.

Fill insulation is poured or blown into place (fig. 88, *B*). A vapor barrier should be used on the warm side (the bottom, in case of ceiling joists) before insulation is placed. A leveling board may be used, as shown, to give a constant insulation thickness. Thick batts are also used between ceiling joists.

Rigid fiberboard insulation sheets are applied as specified on page 50.

Precautions in Insulating

There are areas around window and door openings (fig. 89, *A*) that also require insulation. Insulation should be used between the window jamb and the rough opening as well as under the sill. To com-

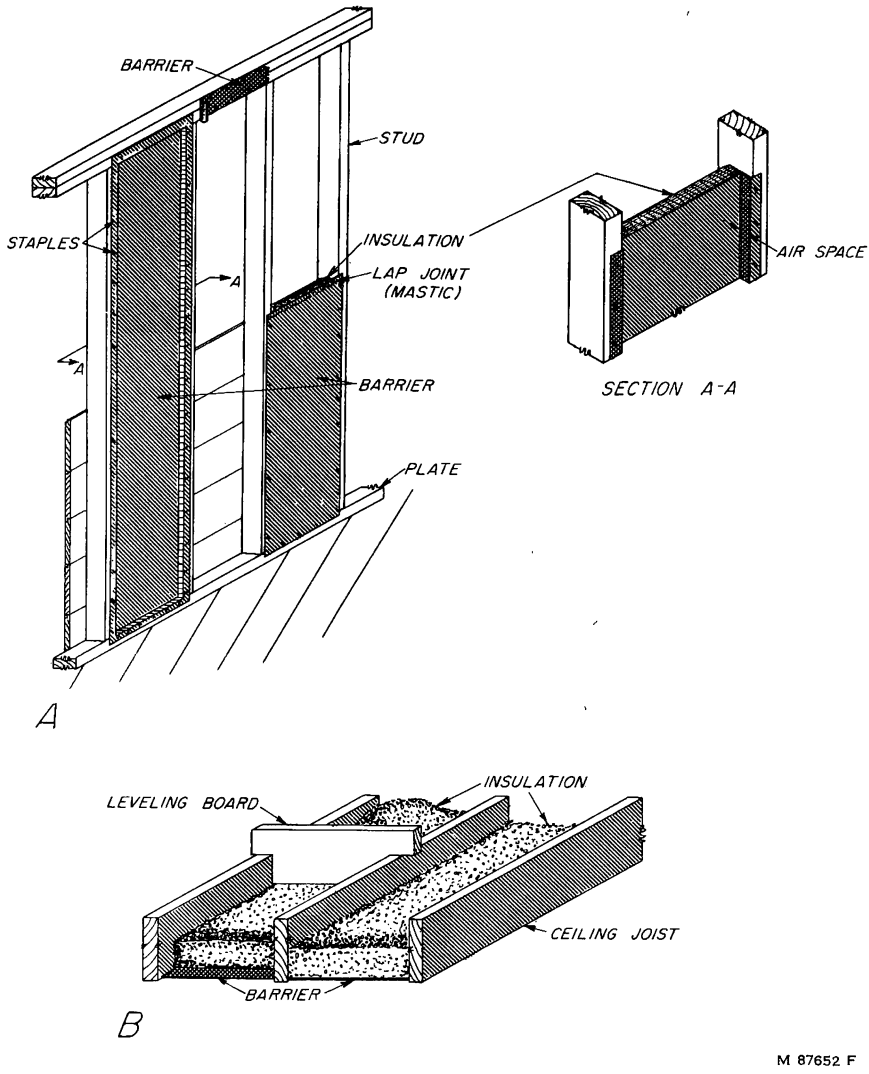

FIGURE 88.—Application of insulation. *A*, Wall insulation, with section *A–A* showing air space; *B*, fill insulation.

plete the job, a vapor barrier should be stapled in place to cover all surfaces not covered by the barrier of the blanket insulation.

In two-story houses the area at joist ends should also be insulated and have a vapor barrier (fig. 89, *B*). This precaution also applies to first-floor joists in the area above the foundation walls.

The insulation should be fitted around the electrical outlet boxes, and the vapor barrier must be tight against their outer edges to prevent the escape of water vapor.

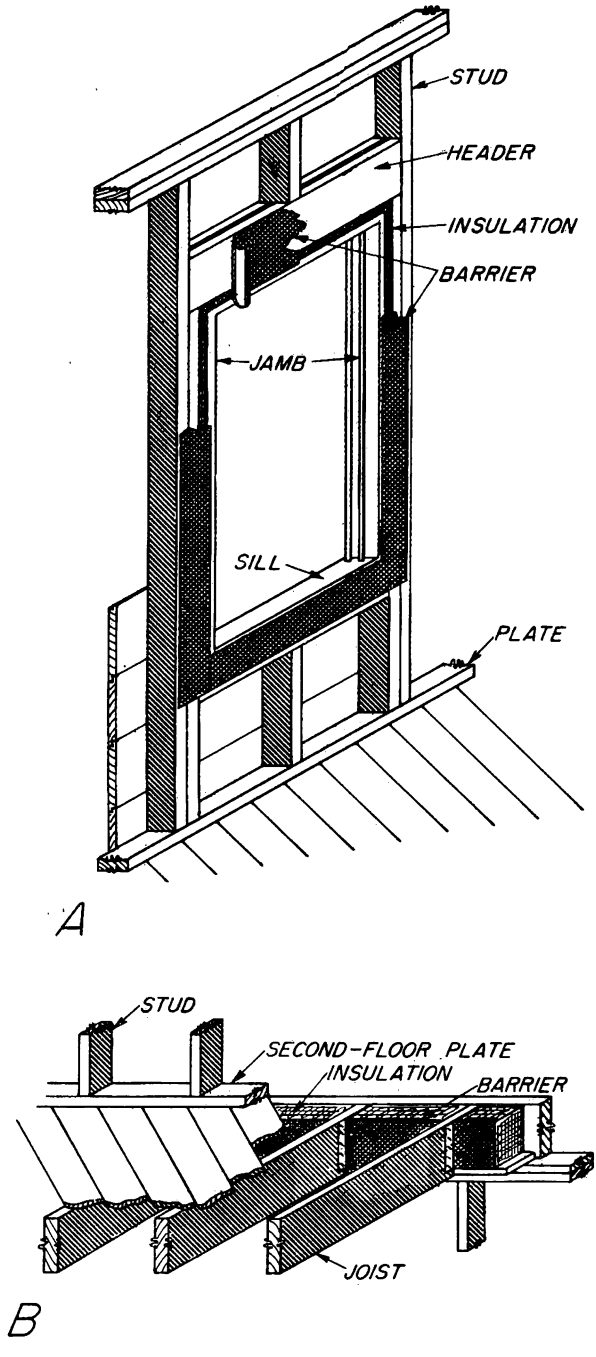

FIGURE 89.—Precautions in insulating. *A*, Around openings; *B*, joist space in outside walls.

Vapor Barriers

Most building materials are permeable to water vapor (*37, 44*). In cold climates during cold weather such vapor, generated in the house from cooking, dishwashing, laundering, bathing, humidifiers, and other sources, may pass through wall and ceiling materials and condense in the wall or attic space, where it may subsequently do damage to exterior paint and interior finish (*6, pp. 480–486*), or may even cause decay in structural members. As a protection, a material highly resistive to vapor transmission, called a vapor barrier, should be used on the warm side of a wall or below the insulation in a roof. Among the effective vapor-barrier materials are such products as papers coated on both sides with asphalt and sold in rolls of 500 square feet weighing about 50 pounds per roll, single- or double-faced aluminum-foil type of reflective insulation, aluminum-foil-backed gypsum lath, and fiberboard lath coated on the back with asphalt (*15; 26, pp. 33–37*).

Asphalt-laminated paper makes a good barrier for use back of dry-wall finishes, but should not be used where the paper could become wet during construction. Prolonged wetting damages such paper, and its value as a barrier may be lost. Wetting of paper may occur back of metal lath or back of plaster where the plaster is applied during cold weather.

Some types of blanket insulation have a barrier material on one side of the blanket. Such blankets should be attached with the tabs at their sides fastened on the faces of the studs, and the blanket should be cut long enough so that the cover sheet can lap over the face of the soleplate at the bottom and over the plate at the top of the stud space. Where the membrane type of vapor barrier is used, it should be applied vertically over the face of the studs and tacked down. The lath or wall finish is then applied over the vapor barrier. Vapor barriers should be cut to fit tightly around electric-wire outlets and switch boxes. Any cold-air returns to the furnace in outside walls should be lined with tin.

Paint coatings on plaster may be very effective as vapor barriers if materials are properly chosen and applied (*44*). They do not, however, offer protection during the period of construction, and moisture may cause paint blisters on exterior paint before the interior paint can be applied. This is most likely to happen in buildings that are constructed during periods when outdoor temperatures are 25° F. or more below inside temperatures. Paint coatings cannot be considered a substitute for the membrane types of vapor barriers, but they do provide a good degree of protection for houses where other types of vapor barriers were not installed during construction.

Of the various types of paint, one coat of aluminum primer followed by two decorative coats of flat wall or lead and oil paint is quite effective. For rough plaster or for buildings in very cold climates, two coats of the aluminum primer may be necessary. A primer and sealer of the pigmented type followed by decorative finish coats or two coats of rubber-base paint are also effective in retarding vapor transmission. For dry-wall construction where plywood, fiberboard, or other wall materials are used in place of plaster, paint coatings

304696 O—55——8

may be applied to the back or to the face. Asphalt coatings on the back of plywood, for example, make an excellent barrier. Two coats, or enough to make a bright, shiny surface, are required.

Since no type of vapor barrier can be considered 100 percent resistive and since some vapor leakage into the wall may be expected, it is important that the flow of vapor to the outside should not be impeded by materials of relatively high vapor resistance on the cold side of the vapor barrier. For example, sheathing paper should be of a type that is waterproof but not highly vapor resistant. Tarred felt meets this requirement.

VENTILATION

Condensation of moisture vapor may occur in attic spaces and under flat roofs during cold weather (*25, pp. 29–46; 44*). Even where vapor barriers are used, it is to be expected that some vapor will work into these spaces around pipes and other inadequately protected areas and some through the vapor barrier itself. Although the amount might be unimportant if equally distributed, it is likely to be concentrated in some cold spot in sufficient quantity to cause damage. Most types of roofings are highly resistant to vapor movement, and little vapor can escape through the roofing itself. The most practical method of removing the moisture is by adequately ventilating the roof spaces.

During cold weather a warm attic combined with exposure to sun may provide enough heat to cause snow on the roof to melt, but without the extra heat from the attic the snow at the eaves does not melt (*15, 43*). Water from the roof will then form ice dams at the gutter and roof overhang and may cause water to back up at the eaves into the walls and ceilings. Similar dams often form in roof valleys. With a well-insulated ceiling and adequate ventilation, attic temperatures are low and melting over the attic space will be reduced.

In hot weather, ventilation of attic and roof spaces offers an effective means of removing hot air and of thereby materially lowering the temperature in these spaces. Insulation should be used in the ceilings below the attic or roof space to further retard heat flow into the rooms below and materially improve comfort conditions.

It is common practice to install louvered openings in the end walls of gable roofs for ventilation. Air movement through such openings is dependent primarily on wind direction and velocity, and no appreciable movement can be expected when there is no wind or unless one or more openings face toward the wind. More positive air movement can be obtained by providing openings at the eave line in addition to openings near the ridge. The differences in temperature between the attic and the outside will then create an air movement independent of the wind and also a more positive movement when there is wind.

Where there is a crawl space under house or porch, ventilation is necessary to remove moisture vapor rising from the soil. Such moisture vapor may otherwise condense on the wood below the floor and facilitate decay.

Area of Ventilators

Types of ventilators and minimum recommended sizes have been established for various types of roofs. The recommended minimum net area for attic or roof-space ventilators is based on the projected ceiling area of the rooms below (fig. 90). The area of ventilator openings as shown are net areas, and the gross area must be increased to allow for any restrictions such as louvers and wire cloth or screen. The screen area should be double the specified net area. To obtain extra area of screen without adding to the area of the vent, use a frame of required size to hold the screen away from the ventilator opening. Use as coarse a screen as conditions permit, since lint and dirt tend to clog fine-mesh screens. Screens should be installed in such a way that paint brushes will not easily contact the screen and close the mesh with paint.

Gable Roofs

Louvered openings are generally provided in the end walls of gable roofs and should be as close to the ridge as possible (fig. 90, *A*). The net area for the openings should be $\frac{1}{300}$ of the ceiling area as shown in the figure. For example, where the ceiling area equals 1,000 square feet, the minimum net area of the ventilators should be $3\frac{1}{3}$ square feet.

As previously explained, more positive air movement can be obtained if additional openings are provided at the eaves. The minimum ventilation areas for this method are shown in figure 90, *B*.

Where there are rooms in the attic with sloping ceilings under the roof, the insulation should follow the roof slope and be so placed that there is a free opening of $1\frac{1}{2}$ inches between the roof boards and insulation for air movement (fig. 90, *C*).

Hip Roofs

Hip roofs should have air-inlet openings beneath the eaves and outlet openings at or near the peak (fig. 91). For minimum net areas of openings see figure 91, *A*. The most efficient type of inlet opening is the continuous slot, which should provide a free opening of not less than $\frac{3}{4}$ inch. The air-outlet opening near the peak can be a globe-type sheet-metal ventilator. If desired, it can be located below the peak on the rear so that it will not be visible from the front of the house. Ridge outlets may be used on hip roofs, as shown in figure 91, *B*.

Flat Roofs

A greater ratio of ventilating area is required in some types of flat roofs than in pitched roofs, because the air movement is less positive and is dependent upon wind. It is important that there be a clear open space above the ceiling insulation and below the roof sheathing for free air movement from inlet to outlet openings (fig. 92). Solid blocking should not be used for bridging or for bracing over bearing partitions if its use prevents the air circulation. Ventilating area and location of ventilator openings differ only slightly for a flat roof having overhanging eaves and ceiling and roof joists combined (fig. 92,

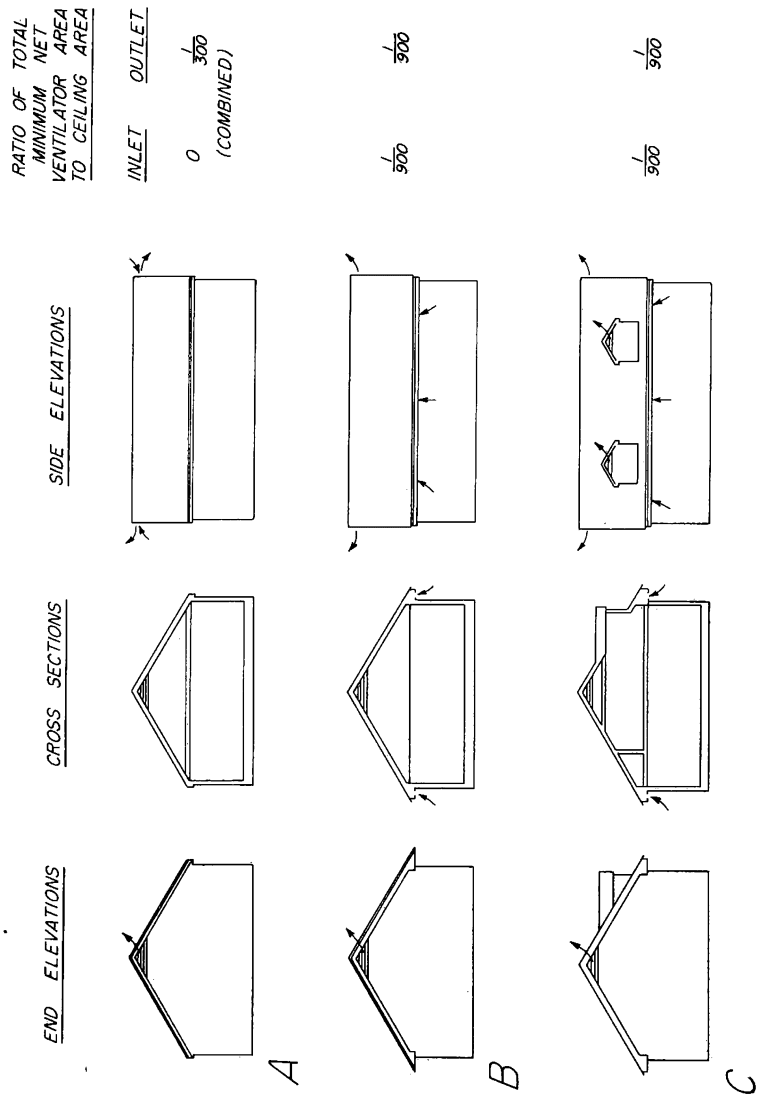

FIGURE 90.—Ventilating areas of gable roofs. *A*, Louvers in end walls; *B*, louvers in end walls with additional openings at eaves; *C*, louvers at end walls with additional openings at eaves and dormers. Cross section of *C* shows free opening for air movement between roof boards and ceiling insulation of attic room.

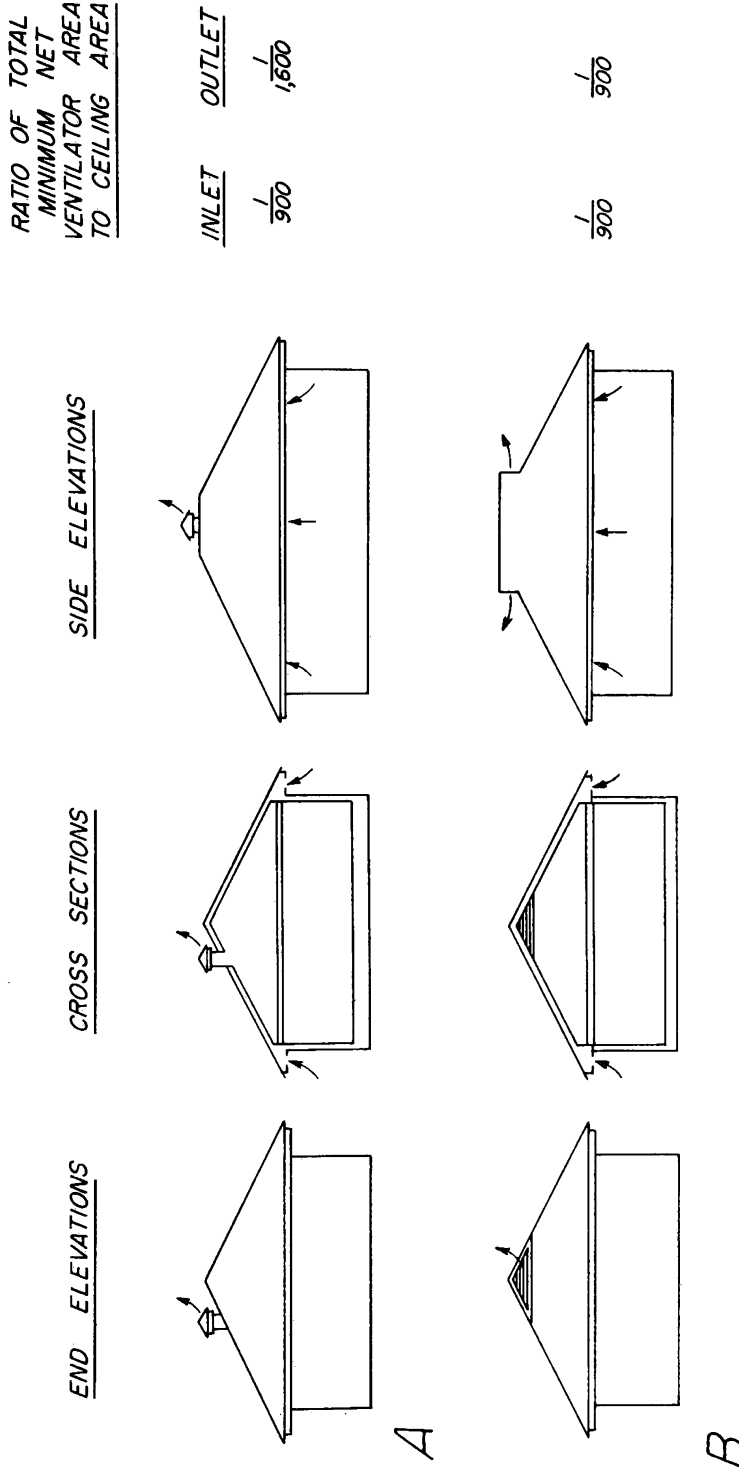

FIGURE 91.—Ventilating areas of hip roofs. *A*, Inlet openings beneath eaves and outlet vent near peak; *B*, inlet openings beneath eaves and ridge outlets.

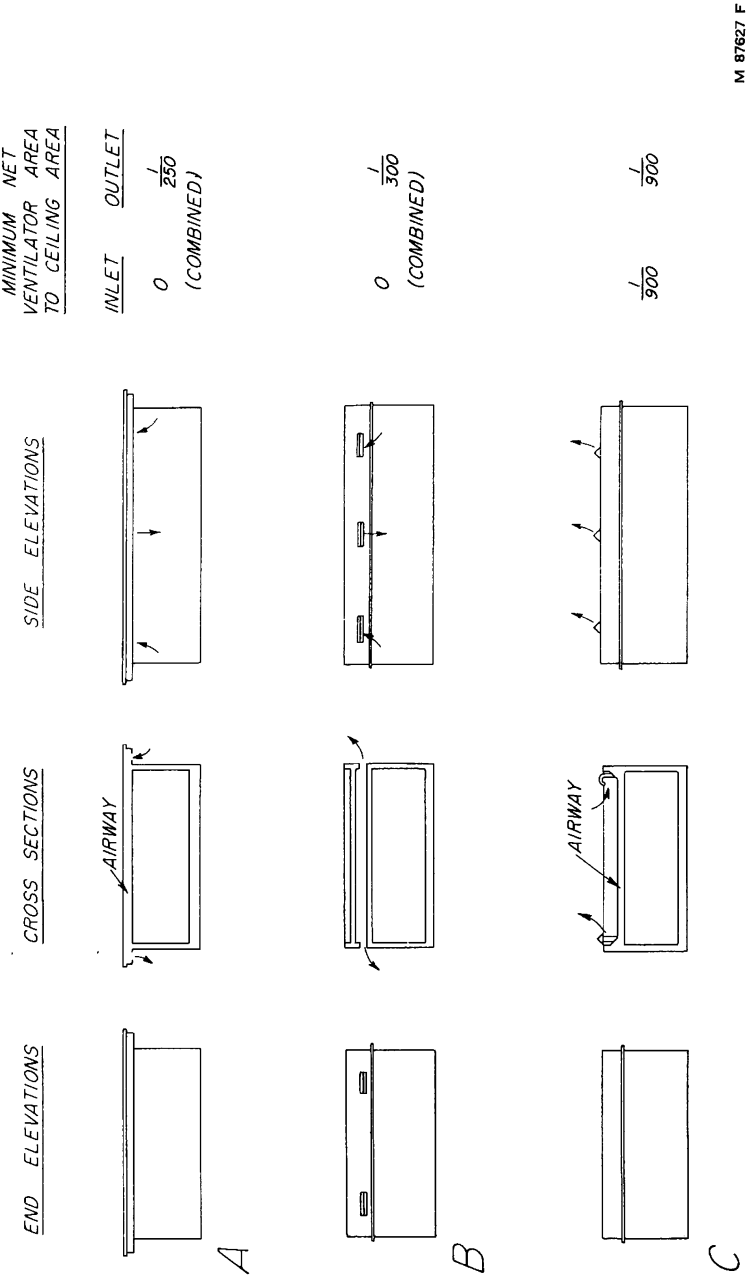

FIGURE 92.—Ventilating area of flat roofs. *A*, Ventilator openings under overhanging eaves where ceiling and roof joists are combined; *B*, for roof with a parapet where roof and ceiling joists are separate; *C*, for roof with a parapet where roof and ceiling joists are combined.

A), a roof with a parapet and where roof joists are separate from ceiling joists (fig. 92, *B*), and a roof with parapet and where the ceiling and roof joists are combined (fig. 92, *C*).

Types and Location of Outlet Ventilators

Gable-end ventilators may vary in appearance and in construction. The ventilator should be located as close to the ridge as possible without affecting the appearance of the house.

One of the popular types that may be located at the ridge and thus assure good circulation is shown in figure 93, *A*. This type may be made of wood and is placed as a frame into the rough opening, and the gable trim is then installed. One method of construction is shown in figure 93, *B*. This type, adjustable to any roof angle, is available in sheet metal. Figure 93, *C* and *D*, illustrate other types of ventilators frequently used at gable ends.

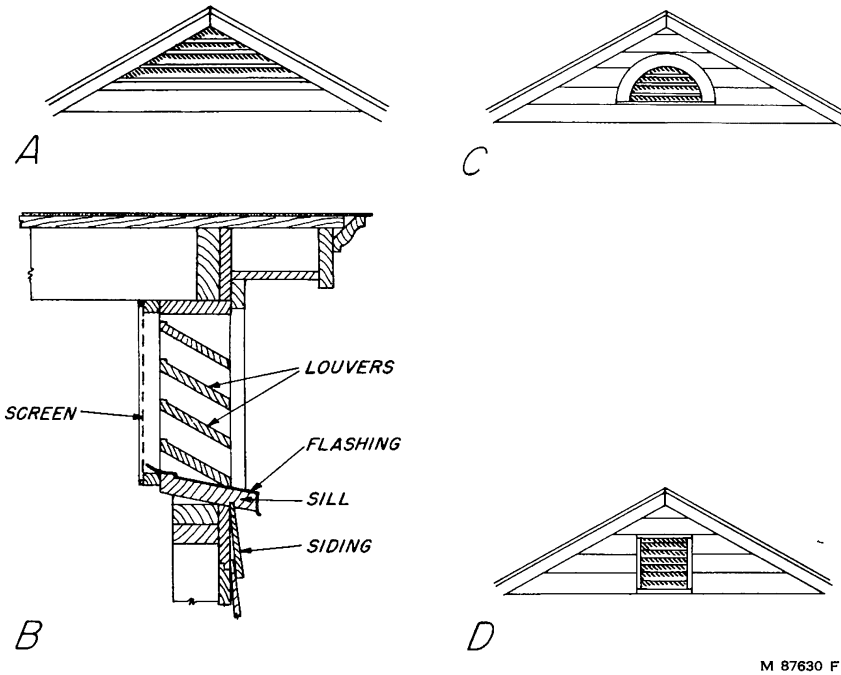

FIGURE 93.—Outlet ventilators. *A*, Triangular type of louver under ridge; *B*, construction of louver; *C*, half-circle type; *D*, square or rectangular type. *C* and *D* types are located somewhat below ridge for sake of appearance.

Types and Location of Inlet Ventilators

The cornice or soffit type of inlet ventilator may be used on both gable- and hip-roofed houses. For best results these ventilators should consist of a continuous screened slot. However, if a continuous vent is not used, a number of smaller screened vents, as shown in figure 94, *A*,

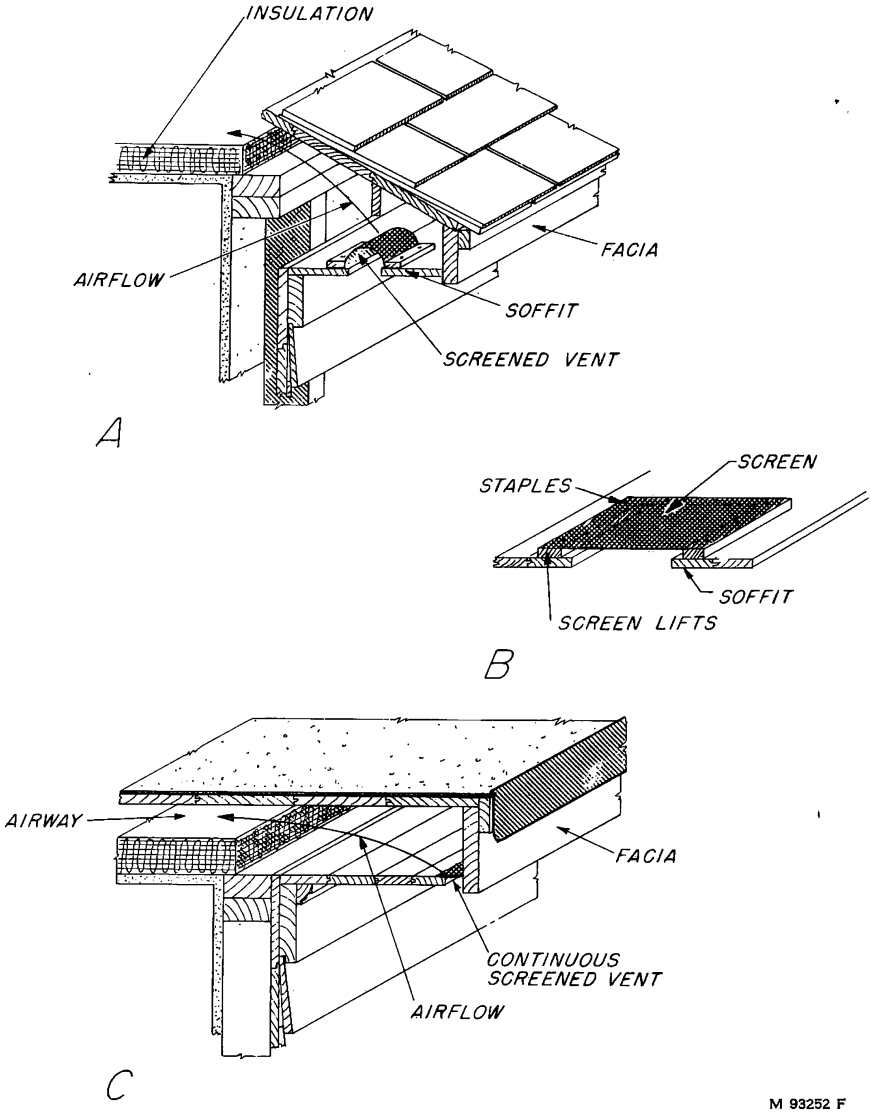

FIGURE 94.—Inlet ventilators. *A*, Soffit vent with arched screen; *B*, with flat screen; *C*, with continuous screened vent.

are more effective than fewer larger ones. The space over the vent and above the ceiling insulation should be kept free for good circulation. Figure 94, B, shows another method of installation.

A continuous vent for a flat roof may be installed as shown in figure 94, *C*. This screened vent may also be located at the wall line and may be partially concealed by moldings. Space between joists should be unobstructed from one side of the building to the other.

Crawl-Space Ventilation and Soil Cover

The crawl space below the floor of a basementless house and the space below porches supported on wood framing should be ventilated. Where there is a partial basement with one side open to the basementless space, no wall vents are required in the basementless space if the ventilating openings in the basement space are equal to $1/50$ of the combined area of basement and basementless space. For crawl space where there is no basement, provide at least four foundation-wall vents located near the corners of the building and having a total free ventilating area equal to $1/160$ of the ground area (fig. 95). Where a soil cover is used, such as smooth-surface roll roofing weighing at least 55 pounds per roll of 108 square feet, with sheets lapped at least 2 inches, only two foundation-wall vents would be required (*15*). They should be so located as to assure cross ventilation. The free ventilating area required where the soil cover is used would be $1/1600$ of the ground area. The soil cover is recommended in all cases where the soil is consistently damp after the house is completed (fig. 95). Vent openings should be covered with corrosion-resistant screening having 4 to 8 meshes per inch.

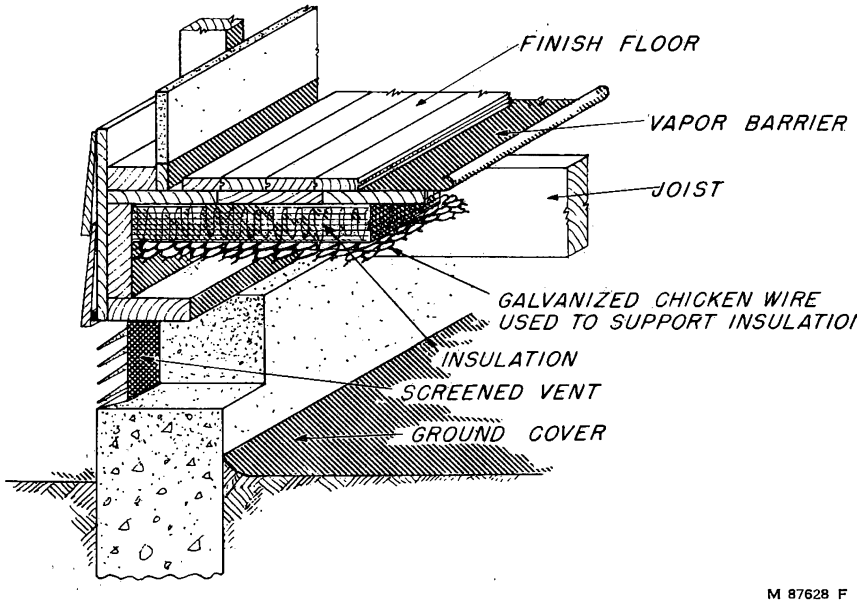

FIGURE 95.—Crawl-space ventilator and soil cover.

INTERIOR WALL AND CEILING FINISH

Interior finish is that material used to cover the interior framed area of walls and ceilings. There are many types of materials used for covering interior walls and ceilings, but the principal types are plaster and dry-wall construction.

Though plaster is widely used in construction, the use of dry-wall materials has been steadily increasing in recent years. It is favored by many builders because of the saving in time involved. Plaster, being a wet material, requires some time for drying. During the period of plastering and drying, other trades cannot be employed effectively on the job. The use of dry wall does not require a waiting period, and it may be applied while other trades are working. Both types of finish have their advantages and disadvantages. Dry-wall construction, for example, often requires that studs and joists have more perfect lineup so that the surface of the material will not reflect the unevenness of the framing members.

A plaster finish requires a plaster base. Wood lath at one time was the plaster base most commonly used, but the introduction of sheet or board base materials has almost eliminated its use. Metal lath is sometimes used, but its somewhat higher cost restricts its use to special purposes.

There are many types of dry-wall finish, but the type most widely used is gypsum board applied in 4-foot sheets. Insulating board in a wide variety of sizes and shapes is available for both wall and ceiling coverings. Plywood, V-beaded boards, and other forms of wood are used to some extent, largely for decorative effect. Some wallboard products can be obtained in large sheets that reduce the number of joints required, although they are difficult to handle.

Plaster Finish

Plaster base.—A plaster finish requires some type of base upon which plaster can be spread. The base must have bonding qualities so that plaster adheres or is keyed to the base that has been fastened to the framing members.

One of the popular types of plaster base, which may be used on side walls or ceilings, is gypsum-board lath (fig. 96, *A*). Such lath is 16 by 48 inches and is applied horizontally or across the frame members. It has paper faces with a gypsum filler. For stud or joist spacing of 16 inches on center, ⅜-inch thickness is used. For 24-inch on-center spacing, ½-inch thickness is required. This material can be obtained with a foil back that serves as a vapor barrier; and if it faces an air space, it has some insulating value. It is also obtainable with perforations (fig. 96, *B*), which by improving the bond would lengthen the time the plaster would remain intact when exposed to fire. The building codes in some cities require that gypsum lath be perforated.

Insulating fiberboard lath (fig. 96, *C*) may also be used as a plaster base. It is usually ½-inch thick and 18 by 48 inches. It often has a shiplap edge and may be used with metal clips that are located between studs or joists to stiffen the horizontal joints. Fiberboard lath has a value as insulation and may be used on walls or ceilings adjoining exterior or unheated areas.

Expanded-metal lath (fig. 96, *D*) consists of sheet metal slit and expanded so as to form innumerable openings for the keying of plaster.

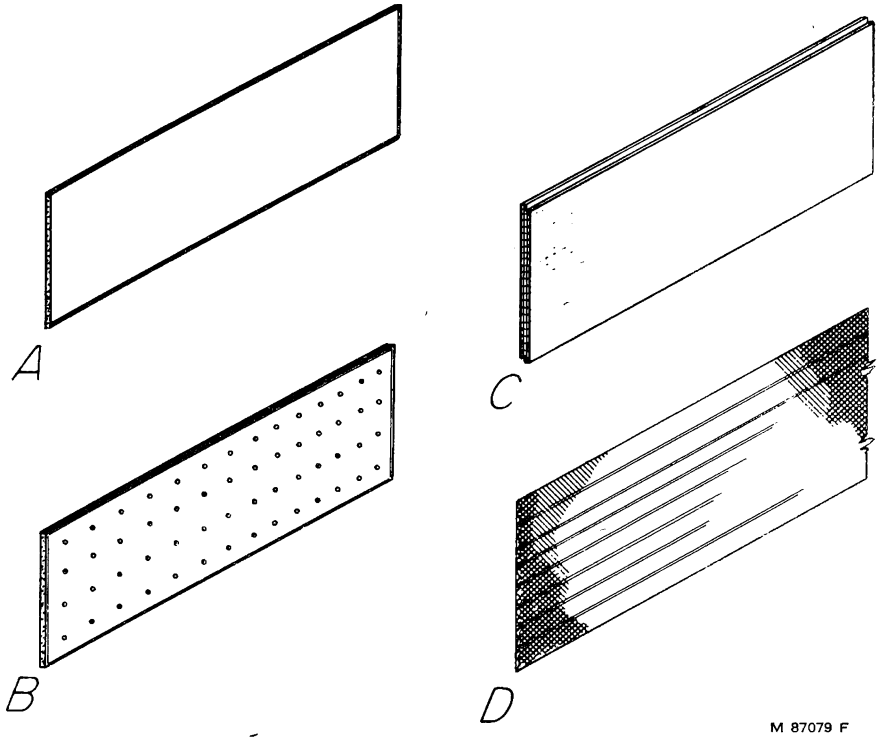

FIGURE 96.—Plaster-base materials. *A*, Gypsum board; *B*, gypsum board with perforation; *C*, insulating fiberboard lath; *D*, metal lath.

It should be painted or galvanized, and its minimum weights for 16-inch stud or joist spacing are as follows:

Use	*Pounds per square yard*
Walls	2.5
Ceilings	3.4
Ceilings (with flat rib)	2.75

Metal lath is usually 27 by 96 inches in size. Other materials such as wood lath, woven-wire fabric, and galvanized-wire fabric may also be used as a plaster base.

Installation of plaster base.—Gypsum lath should be applied horizontally with joints broken as shown in figure 97, *A*. Vertical joints should be made over the center of studs or joists and should be nailed with 13-gage gypsum-lathing nails 1⅛-inches long and with a ⅜-inch flat head. Nails should be spaced 4 inches on center, or 5 nails for the 16-inch height, and should be nailed at each stud or joist crossing. Lath joints over heads of openings should not occur at the jamb lines. Insulating lath should be installed much as gypsum lath, except that 13-gage 1¼-inch blued nails should be used.

Expanded-metal lath applied around a tub recess for ceramic-tile application should be used over a paper backing. Studs should be covered with 15-pound asphalt-saturated felt applied shingle style (unless metal lath is paperbacked). The scratch coat should be Port-

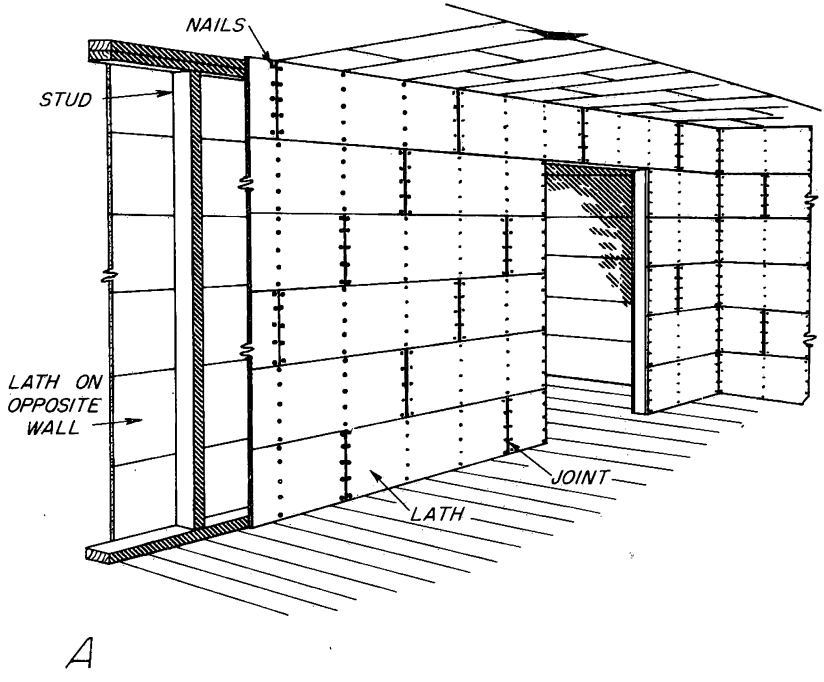

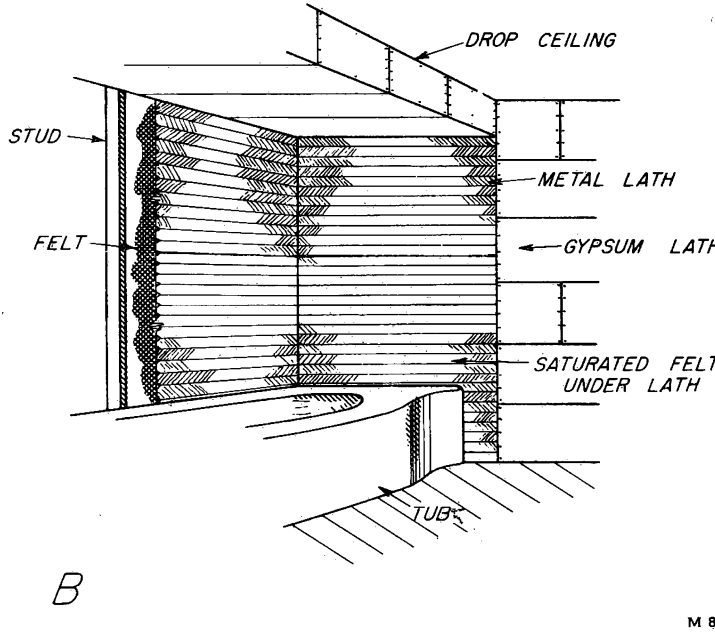

M 87080 F

FIGURE 97.—Application of plaster base. *A*, Gypsum lath; *B*, metal lath.

land-cement plaster, of 5/8-inch minimum thickness and integrally waterproofed, and must be scratched (roughened) thoroughly. The scratch coat should be dry before ceramic tile is applied (fig. 97, *B*).

Plaster reinforcing.—Because some drying may take place in wood framing members after the house is completed, some shrinkage can be expected, which, in turn, may cause plaster cracks to develop around openings and in corners. To minimize, if not eliminate, this cracking, expanded-metal lath is used in certain key positions over the plaster-base material as reinforcement. Strips of expanded-metal lath may be used over window and door openings (fig. 98, *A*). A strip 8 by 18 or 20 inches, placed diagonally across each upper corner, should prove effective. The metal lath should be tacked lightly in place.

Inside corners at the juncture of walls and ceilings and of walls should be reinforced with cornerites of metal lath or wire fabric (fig. 98, *B*), except where special clip systems are used for installing the lath, and the manufacturers of such systems do not recommend cornerites. Minimum width of cornerites should be 5 inches, or 2½ inches on each surface of internal angles. Cornerites should also be tacked lightly in place.

Corner beads (fig. 98, *C*) of expanded-metal lath or of perforated metal should be installed on all exterior corners. They should be applied plumb and level. The bead acts as a leveling edge when walls are plastered and reinforces the corner against mechanical damage.

Metal lath should also be used under flush beams (fig. 98, *D*) and should extend well beyond the edges of the beam. Where reinforcing is required over solid-wood surfaces such as drop beams, the metal lath

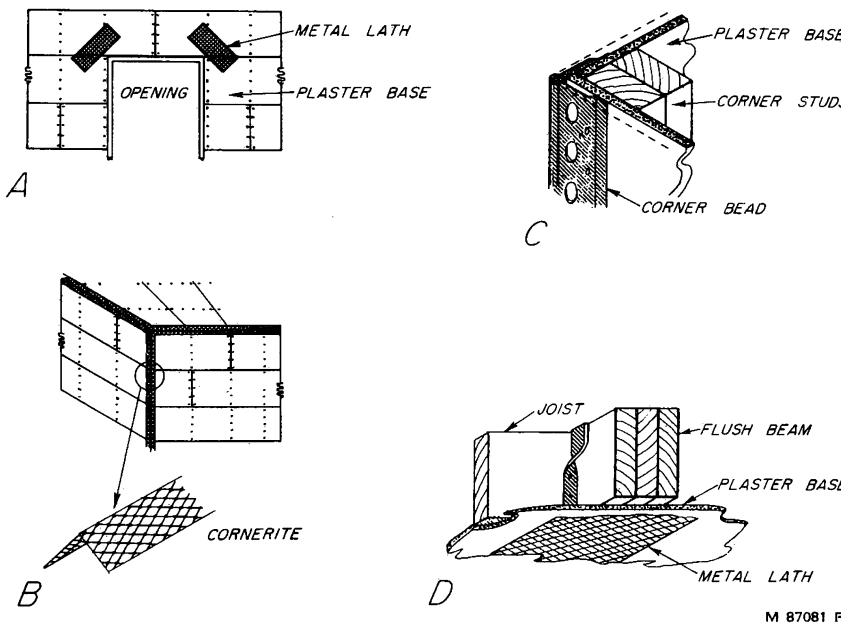

FIGURE 98.—Reinforcement of plaster. *A*, At openings; *B*, at inside corners; *C*, at exterior corners; *D*, under flush beams.

should be installed on strips or self-furring nails should be used to set the lath out from the beam. The lath should be lapped on all adjoining gypsum-lath surfaces.

Plaster grounds.—Plaster grounds are strips of wood, usually the same thickness as the lath and plaster, that are attached to the framing before the plastering operation. Plaster grounds are used around window and door openings as a plaster stop and along the floorline for attaching baseboard. They serve as leveling surfaces when plastering and as a nailing base for finish trim (fig. 99, *A*).

Plaster grounds are of two types; i. e., those that remain in place and those that are removed after plastering is completed. The grounds that remain in place are usually 7/8 inch thick and may vary in width from 1 inch around openings to 2 inches for those used along the floorline. These grounds are nailed securely in place before the plaster base is installed (fig. 99, *B*).

Where painted finish is used, finished doorjambs are sometimes placed in the rough openings, and the edges of the jambs serve as grounds during the plastering operations.

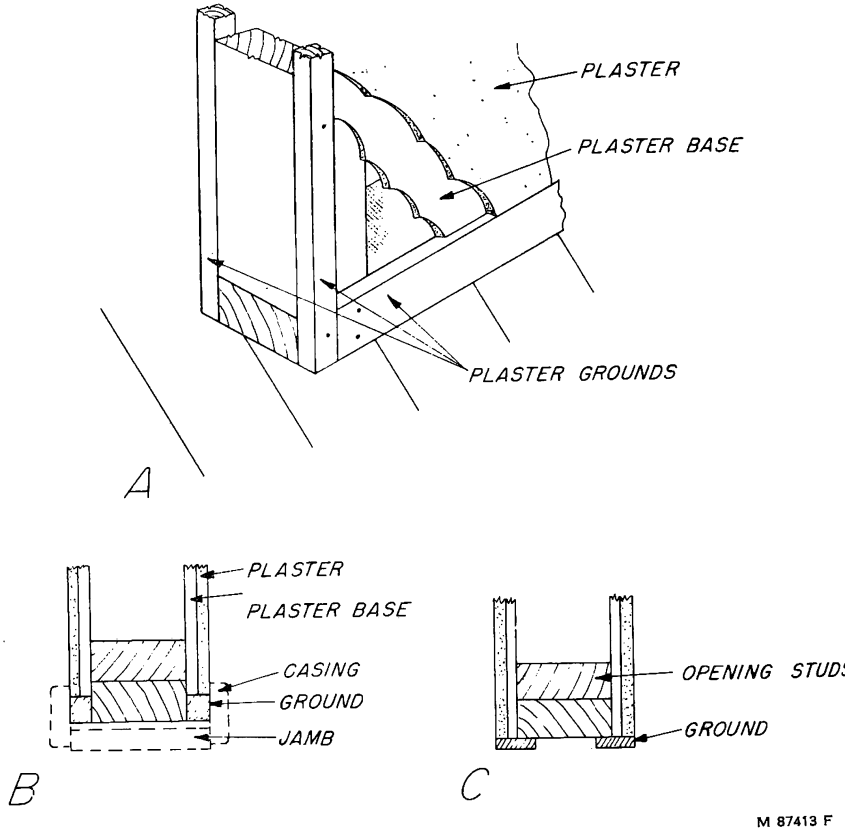

FIGURE 99.—Plaster grounds. *A*, At door and floorlines; *B*, left in place; *C*, temporary grounds.

Another type sometimes used around interior-door openings consists of narrow strips that are nailed to the opening studs and header (fig. 99, *C*). These strip grounds are spaced to conform to the width of the doorjambs, usually 5⅜ inches, and insure a good casing fit when trim is installed. The grounds are removed after the plaster is dry.

Plastering materials and method of application.—Plaster for interior finishing is made from combinations of sand, lime or prepared plaster, and water. Waterproof-finish wall materials (Keene's cement) are available and should be used in bathrooms, especially in showers or tub recesses when tile is not used, and sometimes in the kitchen wainscot.

Plaster should be applied in three-coat or two-coat double-up work. The minimum thickness over a lath or masonry base should be ½ inch. The first plaster coat over metal lath is called the scratch coat and is scratched after a slight set has occurred to insure a good bond for the second coat. The second coat is called the brown or leveling coat, and it is during the application of this coat that the leveling is done.

The double-up work, combining the scratch and brown coat, is used on gypsum or insulating lath, and leveling and plumbing of walls and ceilings are done during the application of this work.

The final or finish coat consists of two general types, the sand-float and the putty finish. In the sand-float finish, lime is mixed with sand and results in a textured finish, with the texture depending on the coarseness of the sand used. Putty finish is used without sand and has a smooth finish. This is commonly used in kitchens and bathrooms where a gloss paint or enamel finish is often employed, and in other rooms where a smooth finish is desired. The plastering operation should not be done in freezing weather without the use of constant heat for protection from freezing. In normal construction the heating unit is in place before plastering is started.

Insulating plaster, consisting of a vermiculite, perlite, or other aggregate used with the plaster mix, may also be used for wall and ceiling finishes.

Dry-Wall Finish

Dry-wall finish is a material that requires little if any water for application. More specifically, dry wall finish may be gypsum board, plywood, fiberboard, or wood in various sizes and forms.

The use of thin sheet materials such as plywood or gypsum board requires that studs and ceiling joists have good alinement. Wood sheathing accomplishes this in the wall, and a "strongback" (fig. 100, *B*) (rectangular framing member fastened to and leveling the joists) provides for the alining of ceiling joists of unfinished attics.

Minimum thicknesses for materials often used are as follows:

	Material thickness when framing is spaced		
	16 inches (inch)	*20 inches (inch)*	*24 inches (inch)*
Finish:			
Plywood	¼	¼	⅜
Gypsum board	⅜	½	½
Fiberboard	½	¾	¾

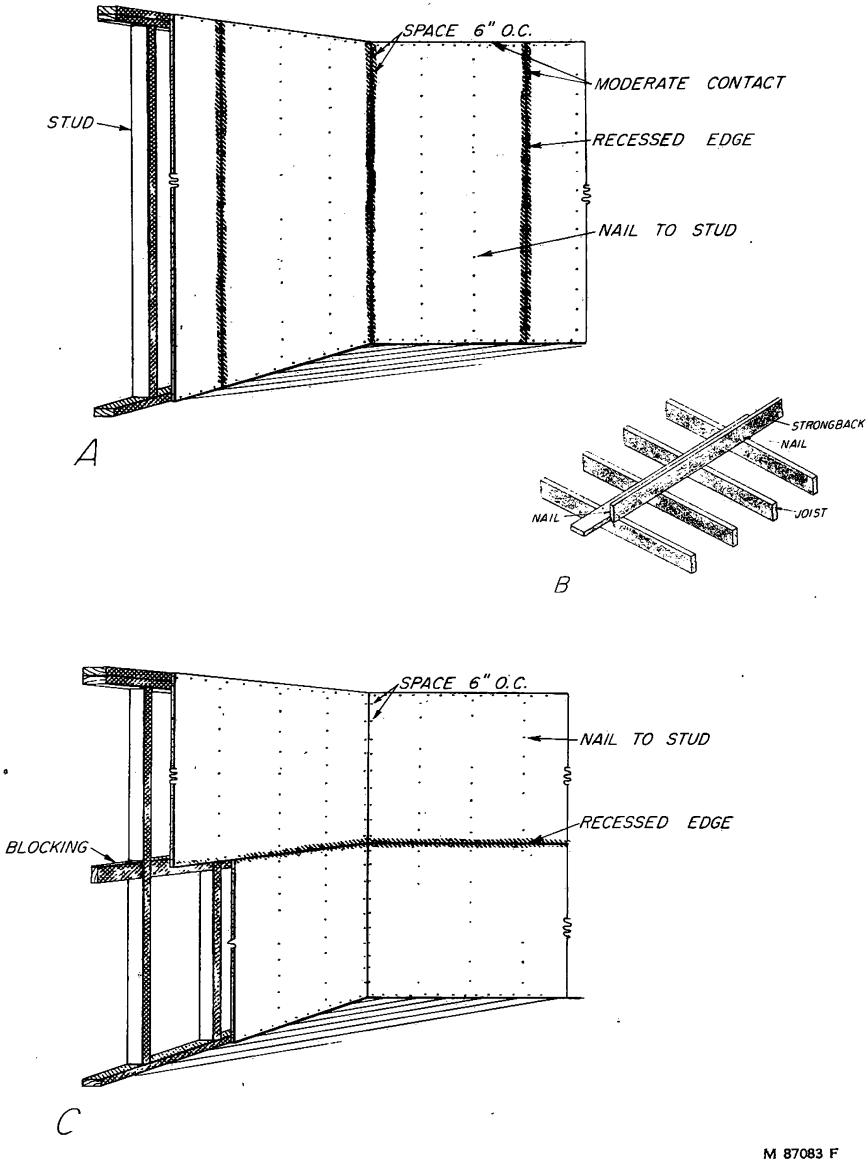

FIGURE 100.—Application of dry-wall finish. *A*, Vertical application of gypsum board; *B*, strongback; *C*, horizontal application of gypsum board.

The long dimension of ¼-inch plywood should be at right angles to framing members spaced 20 inches, and the long dimension of ½-inch gypsum board at right angles to framing members spaced 24 inches.

Gypsum board.—Gypsum board is a sheet material composed of a gypsum filler faced with paper. Sheets are usually 4 feet wide and

they can be obtained in lengths up to 12 feet. The edges along the length of the sheet are recessed to receive joint cement and tape. Although gypsum board may be used in 3/8-inch thickness, 1/2-inch board offers greater resistance to deflection between framing members.

Gypsum board may be applied to walls either vertically or horizontally. Vertical application with 4-foot-width sheets will cover 3 stud spaces when studs are spaced 16 inches on center. Edges should be centered on studs, and only moderate contact should be made between edges of the sheet. Fivepenny cement-coated nails (1 5/8 inches long) should be used with 1/2-inch gypsum, and fourpenny (1 3/8 inches long) with the 3/8-inch-thick material. Nails should be spaced 6 to 8 inches for side walls and 5 to 7 inches for ceiling application (fig. 100, *A*).

The horizontal method of application is best adapted to rooms in which full-length sheets can be used, as it minimizes the number of vertical joints. Where joints are necessary, they should be made at windows or doors. Nail spacing is the same as that used in vertical application. Where framing members are more than 16 inches on center, solid blocking should be used along the horizontal joint (fig. 100, *C*).

Another method of gypsum-board application includes an under course of 3/8-inch material applied vertically by nailing. The finish 3/8-inch sheet is applied horizontally, usually in room-size lengths by means of an adhesive, with only enough nails used to hold the sheet in place until the adhesive is dry. The manufacturer's recommendations should be followed.

In the finishing operation nails should be set about 1/16 inch below the face of the board. This set can be obtained by using a slightly crowned hammer (fig. 101, *A*). In setting the nail in this manner, a slight dimple is formed in the face of the board without breaking the paper cover. The setting of the nail is particularly important for center nailing, as edge nailing will be covered with tape in addition to joint cement.

Joint cement comes in powder form and is mixed with water to a soft putty consistency. The procedure for taping (fig. 101, *B*) joints is as follows:

1. Use a wide putty knife (4 to 6 inches) and spread the cement in the recess, starting at the top of the wall.
2. Press the tape into the recess with the putty knife until the joint cement is forced through the perforations.
3. Cover the tape with additional cement, feathering the outer edges.
4. Allow to dry and apply the second coat after sanding lightly, feathering the edges. A steel trowel is sometimes used. For best results a third coat may be applied, feathering beyond the second coat.
5. After the joint cement is dry, sand smooth (an electric hand vibrating sander is often used).
6. For hiding nail indentations in the center of the board, fill with joint cement and sand smooth when dry. Repeat with the second coat.

Interior corners may be treated with tape. Fold the tape down the center to a right angle (fig. 101, *C*) and (1) apply cement, (2) press the tape in place, and (3) finish the corner with cement. Sand smooth

304696 O—55——9

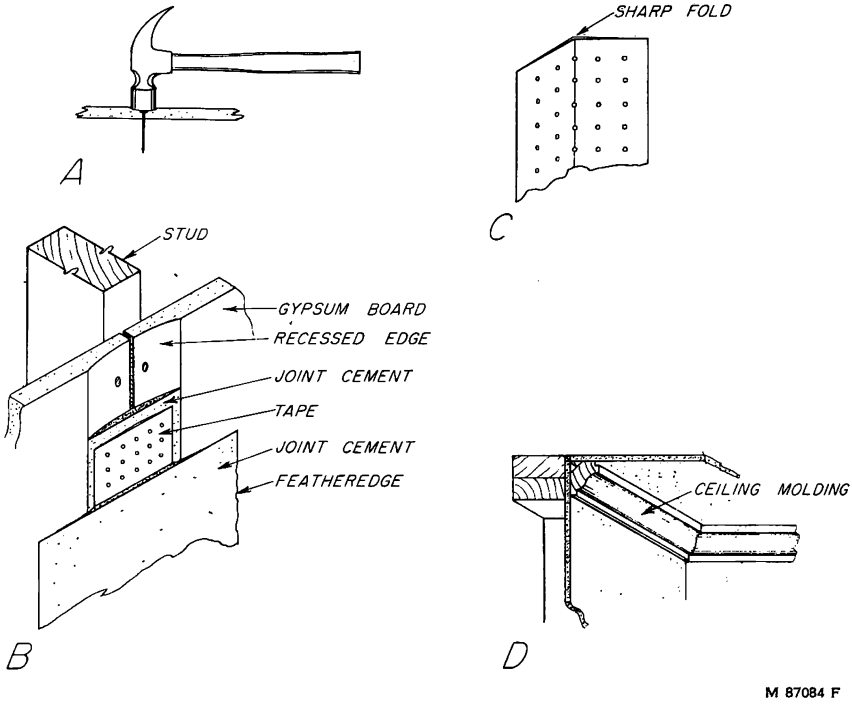

FIGURE 101.—Finishing of gypsum board. *A*, Nail set with crowned hammer; *B*, cementing and taping of joint; *C*, taping at inside corners; *D*, finish at ceiling.

when dry and apply a second coat. The interior corners between the wall and the ceiling may be concealed with a molding. When molding is used (fig. 101, *D*), it is not necessary to tape this joint. Metal corner beads should be used on exterior corners and for arches.

Plywood.—Plywood may be used in large sheets and applied vertically or horizontally. With horizontal application the horizontal joint should be backed with solid blocking. Joints may have a V-edge, or a molding may be used to cover the joints. Plywood should be nailed to framing members with 1¼-inch brads for ¼-inch plywood, and the nails should be set. Grooves may be cut with a machine saw or power handsaw to vary the pattern.

Wood and fiberboard.—The so-called plank application may consist of fiberboard or wood of various species (fig. 102, *A*). It may be used vertically or horizontally, and the application of both wood and fiberboard is facilitated by a tongue and groove system, often with additional edge molding. When vertical application is used, nailers should be provided between the studs and the thickness of the material should be in accordance with the vertical span between nailers. Blind-nailing is generally used to conceal the nails.

Fiberboard supplied in squares or rectangles is called tileboard. Sizes are 12 by 12, 12 by 24, 16 by 16, and 16 by 32 inches. The tile is often tongued and grooved and is supported by concealed nails, clips, or staples.

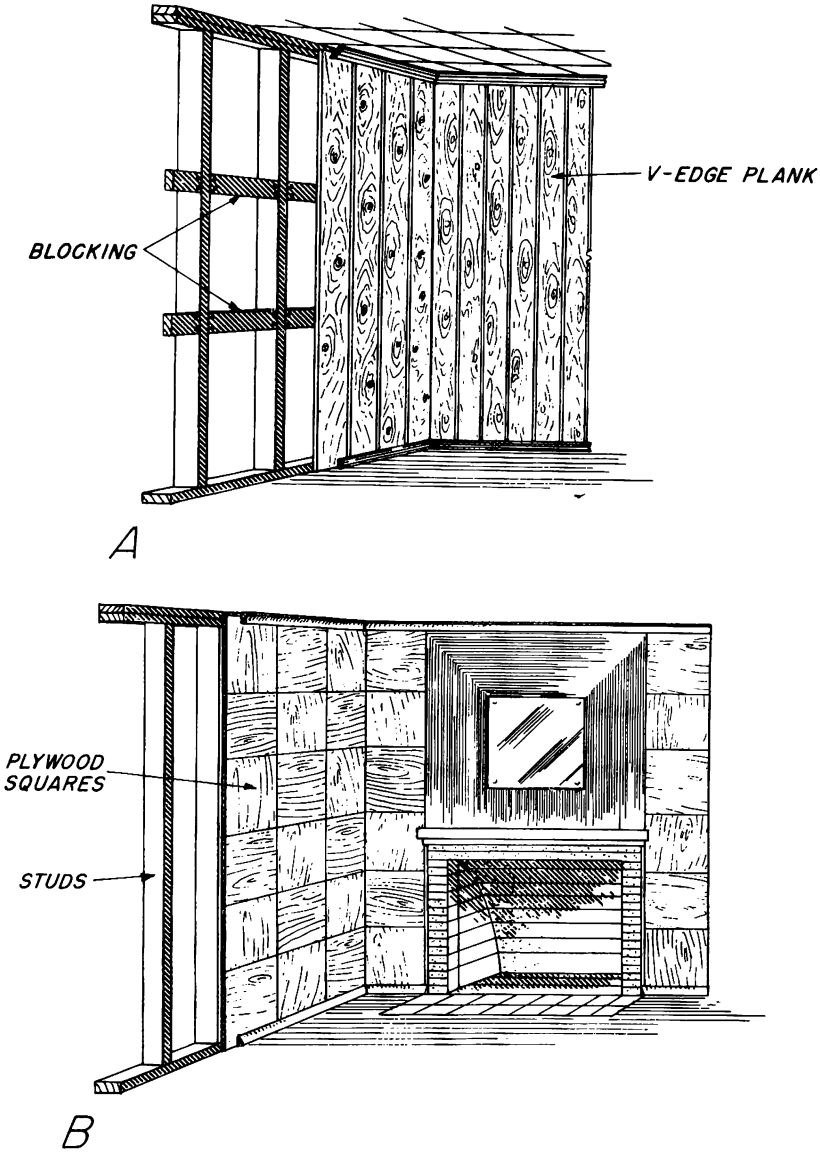

FIGURE 102.—Installation of two types of dry-wall finish. *A*, Plank, vertical application; *B*, plywood or wood squares.

Fiberboard is sometimes used on ceilings or above a wainscot on walls. Fiberboard for exposed interior surfacing may be obtained with a factory-painted finish or it may be repainted on the job for desired interior effects. Acoustical fiberboard tile is sometimes used in ceilings.

Various types and patterns of woods are available for application on walls to obtain desired decorative treatment. For informal effects, knotty pine, white-pocket fir, sound wormy chestnut, and pecky cypress are often used to cover one or more sides of a room, finished natural or sometimes stained and varnished. Interesting wall treatment may be obtained (fig. 102, *B*) by cutting in patterns or by changing the direction of the grain. This particular treatment is often effective on a fireplace wall or in dens, but it should not be overdone because its effectiveness will be lost when all walls are treated too much alike. Moisture content of wood when installed should be 8 to 10 percent (see moisture-content map, p. 136).

FLOOR COVERINGS

The term "finish flooring" applies to the material used as the final wearing surface that is applied to a floor. There are many of these materials, each one having properties suited to a particular usage. Of these properties, durability and ease of cleaning are essential in all cases. Specific service requirements may call for special properties, such as resistance to hard wear in storehouses and on loading platforms; comfort to users in offices and shops; and attractive appearance, which is always desirable in residences.

There is a wide selection of material that may be used for flooring. Hardwoods and softwoods are available as strip flooring in a variety of widths and thicknesses and as random-width planks, parquetry, and block flooring (*23*). Other materials include plain and inlaid linoleum, and asphalt, rubber, and ceramic tile.

Wood-Strip Flooring

Softwoods most commonly used for flooring are southern yellow pine, Douglas-fir, redwood, western larch, and western hemlock. It is customary to divide the softwoods into two classes, (1) vertical or edge grain and (2) flat grain, and each class is separated into select and common grades. The select grades, designated as "B and Better" grades, and sometimes the "C" grade, are used when the purpose is to stain, varnish, or wax the floor. The "C" grade is well suited for floors to be stained dark or painted, and lower grades are for rough usage and sometimes when covered with carpeting. Softwood flooring is manufactured in several widths. In some places the 2½-inch pattern is preferred, while in others 3½-inch width is more popular; other widths range from 2¼ to 5 inches on the face. Softwood flooring has tongue-and-groove edges and may be hollow backed or grooved. Vertical-grain flooring stands up better than flat-grain flooring under hard usage.

Hardwoods most commonly used are red and white oak, hard maple, beech, and birch. Maple, beech, and birch come in several grades, such as First, Second, and Third, Second and Better, and Third and Better, while oak is graded by quality for finish in seven grades, Clear, Sap Clear, and Select in the quartersawn grades, and Clear, Select, No. 1 Common, and No. 2 Common in the flatsawn grades. Other hardwoods

that are manufactured into flooring, although not commonly used, are walnut, cherry, ash, hickory, pecan, sweetgum, and sycamore (quartered).

Hardwood flooring is manufactured in a variety of widths and thicknesses, some of which are referred to as standard patterns, others as special patterns. The widely used standard patterns consist of relatively narrow strips laid lengthwise in a room (fig. 103). The most widely used standard pattern is $^{25}/_{32}$ inch thick and has a face width of 2¼ inches. Other widths are available in this pattern. One edge has a tongue and the other a groove, and the ends are similarly matched. The strips are random length, varying from 1 to 16 feet in length in separate bundles. The number of short pieces will depend on the grade used. Similar patterns of flooring are available in thicknesses of $^{15}/_{32}$ and $^{11}/_{32}$ inch, with a face width of 1½ and 2 inches.

The flooring is generally hollow-backed. The top face is generally slightly wider than the bottom, so that when the strips are driven tight together the upper edges make contact but the lower edges are slightly open. The tongue should fit snugly in the groove, because if it fits too loosely, the floor may squeak.

Another pattern of flooring used to a limited degree is ⅜ inch thick with face widths of 1½ and 2 inches, with square edges and flat back (fig. 103, *C*). Figure 103, *D*, shows a type of wood floor tile commonly known as parquetry.

Installation of wood strip flooring.—Flooring should be laid after plastering or other interior wall and ceiling finish is completed, windows and exterior doors are in place, and most of the interior trim, except base, is applied, so that it may not be damaged by wetting or by construction activity. Where wood floors are used, the subfloor should be clean and level and it should be covered with a deadening felt or heavy building paper. This felt or paper will stop a certain amount of dust, will somewhat deaden the sound, and, where a crawl space is used, will increase the warmth of the floor by preventing

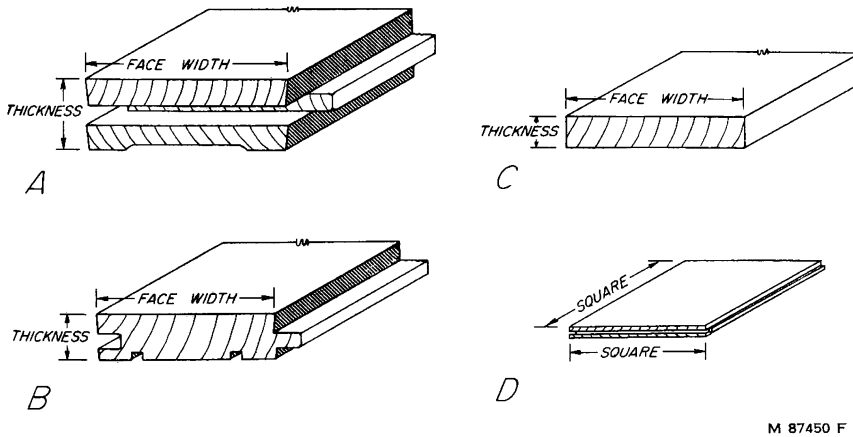

FIGURE 103.—Types of finish flooring. *A*, Side- and end-matched; *B*, side-matched; *C*, square-edged; *D*, wood floor tile, matched.

air infiltration. The location of the joists should be chalklined on the paper as a guide for nailing (*23*).

Strip flooring (fig. 104, *A*) should be laid crosswise of the floor joist, and it looks best when laid lengthwise in a rectangular room. Since joists generally span the short way in a living room, that room establishes the direction for flooring in other rooms.

Flooring should be delivered only during dry weather and should be stored in the warmest and driest place available in the house. The

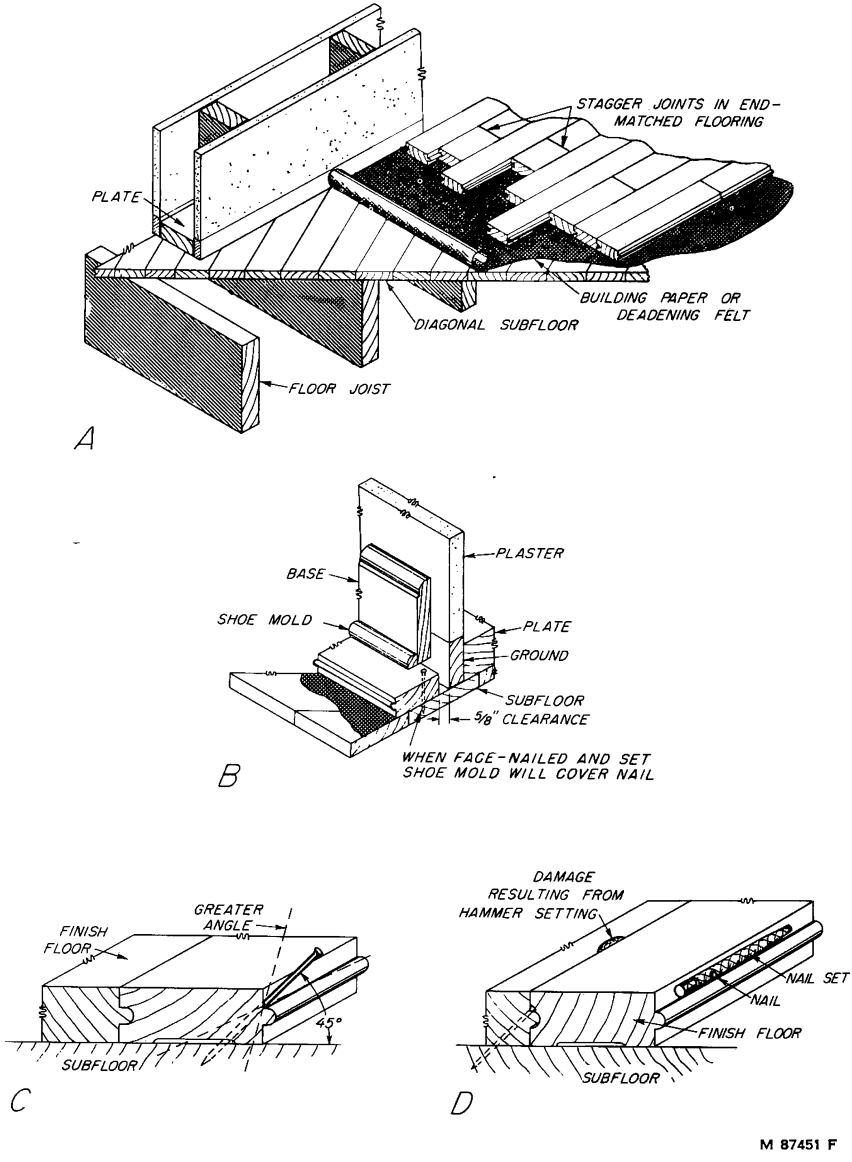

FIGURE 104.—Application of strip flooring. *A*, General application; *B*, laying first strip; *C*, nailing method; *D*, suggested method for setting nails.

recommended average moisture content for flooring at the time of installation in the dry Southwestern States is 6 percent, in the damp Southern and Central States, 10 percent, and in the remainder of the country, 7 percent (see moisture-content map, p. 136). Moisture absorbed after delivery to the house site is one of the most common causes of open joints between floor strips that show up several months after the floor is laid (*45*).

Floor squeaks are caused by movement of one board against another. Such movement may occur because floor joists are too light, sleepers are not held down tightly, tongues are loose fitting, or nailing is poor. Adequate nailing is one important means of minimizing squeaks. When it is possible to nail the finish floor through the subfloor into the joist, a much better job is obtained than if the finish floor is nailed only to the subfloor. Various types of nails are used in nailing various thicknesses of flooring. For $^{25}/_{32}$-inch flooring, it is best to use eightpenny steel-cut flooring nails; for ½-inch, sixpenny, and for ⅜-inch, fourpenny bright wire casing nails (all the foregoing are to blind-nailed). For $^{5}/_{16}$-inch square-edge, it is best to use 1⅛-inch barbed-wire flooring brad No. 16 and face-nail every 7 inches with 2 nails, 1 near each edge of the strip.

Other types of nails have been developed in recent years for nailing of flooring. Among these are annularly grooved and spirally grooved types. In using these nails it is well to check with the floor manufacturer's recommendations as to size and diameter for specific uses. Figure 104, *B*, shows the method of nailing the first strip of flooring. The nail is driven straight down through the board at the groove edge. The nails should be driven into the joist and near enough to the edge so that they will be covered by the base or shoe molding. The first strip of flooring can be nailed through the tongue. Figure 104, *C*, shows that the nail is driven in where the tongue adjoins the shoulder, and at an angle of between 45° and 50°. Do not try to drive the nail down with a hammer, as the wood may be easily struck and damaged (fig. 104, *D*). Use a nail set to finish off the driving. Figure 104, *D*, shows the position of the nail set commonly used for the final driving. In order to avoid splitting, it is sometimes necessary to predrill the holes through the tongue. This will also help to drive the nail more easily into the joist. For the second course of flooring, select the pieces so that the butt joints will be well separated from those in the first course. For floors to be covered with rugs, the long lengths could be used at the sides of the room and the short lengths in the center where they will be covered.

Each board should be driven up tightly, but do not strike the tongue with a hammer as this may crush the wood. Use a piece of scrap flooring for a driving block. Crooked pieces may require wedging to force them into alinement.

Wood-Tile Flooring

Flooring manufacturers have developed a wide variety of special patterns of flooring, sometimes called floor tile and sometimes referred to as parquetry flooring, that can be used over wood subfloors or concrete slabs. One common type of floor tile is a block 9 inches square and

13/16 inch thick made up of several individual strips of flooring held together with glue or splines. Two edges have a tongue, and the opposite edges are grooved. Numerous other sizes and thicknesses are available. In laying, the direction of the blocks is alternated to create a checkerboard effect. The manufacturers supply directions for laying their tile, and it is advisable to follow these directions carefully. When the tiles are used over a concrete slab, a vapor barrier (fig. 105) should be used. The slab should be level, thoroughly cured, and dried before the wood tile is laid. For information on construction of slabs see Concrete Floor Slabs on Ground, page 16.

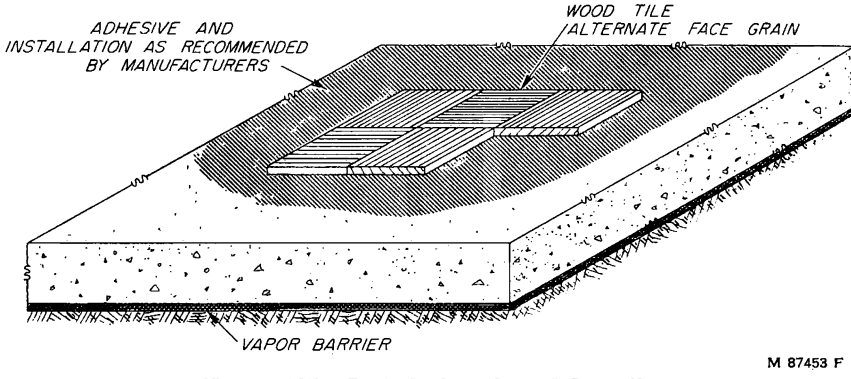

FIGURE 105.—Installation of wood floor tile.

Base for Linoleum, Asphalt-Tile, or Rubber-Tile Floors

Linoleum, asphalt tile, and rubber tile may be laid directly on 25/32-inch tongue-and-groove wood flooring strips, maximum width 3¼ inches, or on a ½-inch plywood subfloor with joist spacing 16 inches on center. Where these finish floors are used for the floor covering in some rooms and wood floors are used in adjacent rooms over a subfloor of common level, a suitable base floor is required for the finish flooring. This base floor may also be tongue-and-groove flooring or plywood, and the thickness of the base floor plus the thickness of the nonwood finish floor should equal the thickness of the finished floors in adjacent rooms in order that the floors will be at the same level.

Linoleum

Linoleum is manufactured in thicknesses ranging from 1/16 to ¼ inch and is generally 6 feet wide. It is made in various grades and can be had in plain color or it may be inlaid or embossed.

Linoleum may be laid on wood or plywood base floors (fig. 106, *A*, *B*). Linoleum should not be laid on concrete slabs on the ground. Since linoleum follows the contour of the base floor over which it is laid, it is essential that the base be uniform and level. When wood floors are used as a base, they should be sanded smooth and be level and dry. Plywood-base floors should be carefully joined where adjacent sheets butt together. After the base floor is correctly prepared,

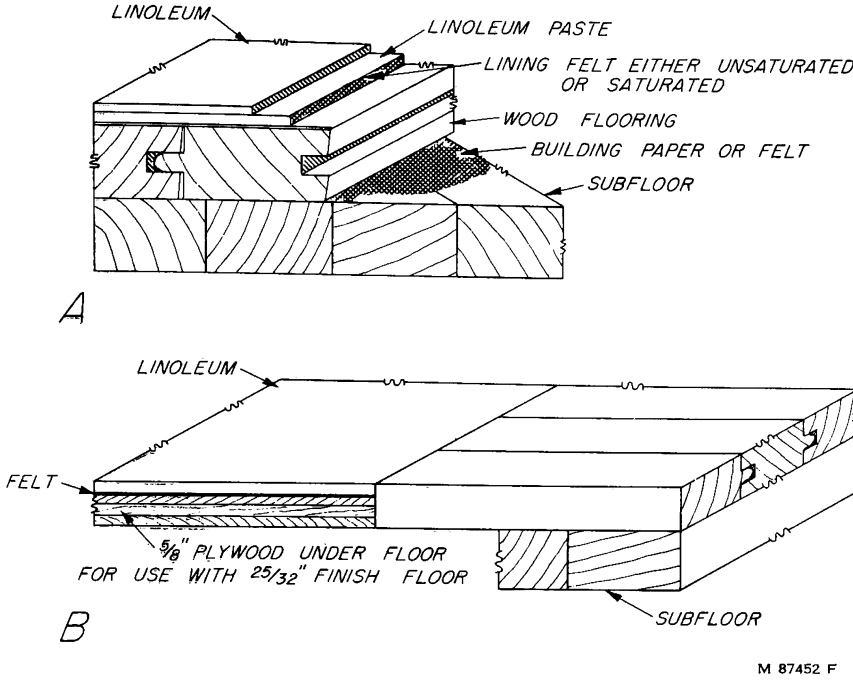

FIGURE 106.—Linoleum finish. *A*, On wood floor; *B*, on plywood.

the linoleum is then laid, pasted, and thoroughly rolled to insure complete adhesion to the floor.

Asphalt-Tile Flooring

Asphalt tile is widely used as a covering over concrete floor slabs and is occasionally used over wood subfloors. It is the least costly of the commonly used floor-covering materials. This tile is about 1/8 inch thick and 9 by 9 or 12 by 12 inches square. Most types of asphalt tile are damaged by grease and oil and for that reason are not used in kitchens.

In laying asphalt tile, it is important that the subfloor or base over which the tiles are to be laid is suitably prepared; otherwise the finish floor will not give satisfactory performance. Most manufacturers provide directions on the preparation of the base and furnish the type of adhesive that is most suitable to their product. The tile should be laid in accordance with the manufacturer's directions. Where a wax finish is desired, water-base wax should be used.

Ceramic Tile

Tile are made in different colors and with both glazed and unglazed surfaces. They are used as a covering for floors in bathrooms, entryways, vestibules, and fireplace hearths, and present a hard and impervious surface. Because of the great variety of possible hues and

textures, ceramic tile are adaptable to a wide range of purposes and characteristics of design. In addition to standard sizes and plain colors, many tile are especially made to carry out architectural effects.

Wood framing for tile floor.—When ceramic tile floors are used with wood frame construction, a concrete bed of adequate thickness must be installed to receive the finishing layer. The minimum thickness of concrete base and tile should not be less than 1¼ inches. To acquire sufficient space for the concrete bed, it is necessary to drop the wood subflooring between the joists (fig. 107, *A*) so that the finish floor will be level with floors in adjoining rooms (fig. 107, *B*). A saturated felt should be applied over the wood subflooring. The concrete bed may be 1 part cement to 3 parts sand, or 1 part cement, 2 parts sand, and 4 parts pea gravel. A wire mesh should be used for reinforcement.

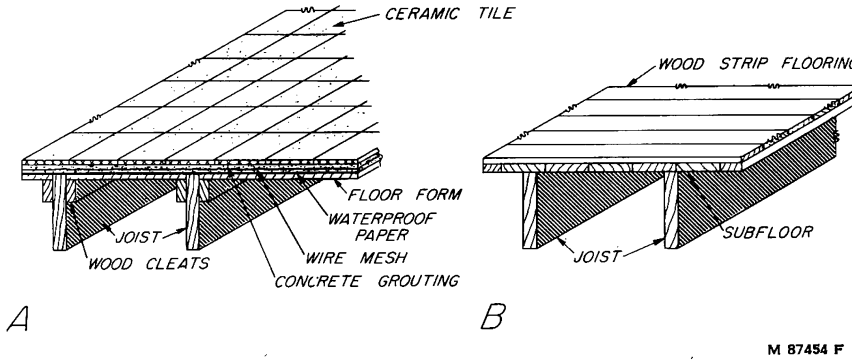

FIGURE 107.—Installation of tile floor.

Rubber Tile

Rubber-tile flooring is resilient, noiseless, waterproof, and it stands up well under hard usage. It may be used over concrete floor slabs, except slabs on ground, or over wood subfloors. The finish may be plain or marbleized in various designs, with the colors running throughout the body of the tile. The tile are made in square shapes ranging in size from 4 by 4 to 18 by 18 inches and in rectangular shapes ranging from 9 by 18 to 9 by 36 inches. Their thickness is from ⅛ to 3/16 inch. The tile are generally laid in a waterproof rubber cement and thoroughly rolled.

Rubber tile should be installed on a wood subfloor above grade. If the subfloor is plywood, rubber tile may be laid directly on the wood surface, making sure that plywood joints do not coincide with rubber tile joints but come midway between the tile joints. If tile is laid on a solid wood subfloor it is recommended that the floor first be sanded smooth, sealed, and then a layer of 15- to 30-pound saturated lining felt bonded to the subsurface. Joints should not coincide with subfloor joints, to prevent expansion or contraction of the subfloor from affecting the rubber tile. Tile should be installed in accordance with manufacturer's recommendations as to both methods and materials.

INTERIOR DOORS, FRAMES, AND TRIM

Interior doors, door frames, and interior trim (*33*) are installed after the finish floor is in place and usually at the same time with cabinets, cases, and other similar millwork. The decorative treatment for interior doors and trim may be paint or a natural finish using stain, filler, varnish, or other selected materials. The finish selected for the woodwork in various rooms often determines the type or species of wood to be used.

Interior finish that is to be painted should be smooth, close grained, and free from pitch streaks. Some of the commonly used species having these requirements to a high degree are ponderosa pine, southern pine, northern white pine, redwood, and spruce. When hardness and resistance to hard usage are additional requirements, species may be birch, gum, walnut, yellow-poplar, and others having similar properties.

For natural finish, a pleasing figure, hardness, and uniform color are desirable. Species commonly used that fit these requirements admirably are ash, birch, cherry, maple, oak, and walnut.

The recommended moisture content for interior finish varies from 6 to 11 percent, depending on the climatic conditions. The areas of varying moisture content in the United States are shown in figure 108.

Trim Parts for Doors and Frames

Door frames.—Door frames are made up of two sidejambs and a headjamb, together with separate moldings called doorstops (fig. 109, *A*.) Stock jambs for 2- by 4-inch-stud walls are made of nominal 1-inch material and, for plastered walls, are 5⅜ inches wide. Sidejambs are often dadoed at the mill, with doorstops and headjamb cut to size. Widths of openings vary from 2 to 3 feet. If frames are unassembled when delivered, they should be nailed together with four eightpenny coated nails at each corner.

Casing.—Casing is the framing or edging trim used around door openings. Casing may vary in width from 1¾ to 3⅝ inches and in thickness from ½ to ¾ inch. There are many standard patterns obtainable from stock. Some of the types are shown in figure 109, *B*, *C*, *D*, *E*. Those with molded forms require miter joints when fitting.

Interior doors.—There are two general types of interior doors, the flush and the panel door. The standard thickness for interior doors is 1⅜ inches. They may be obtained in various widths (*32*).

The flush door is made up with facings of plywood or other sheet material glued to a light framework (fig. 110, *A*). Cores are made of light wood sections or other materials that possess the necessary physical properties. The species commonly used for facings are oak, birch, and gum. For natural or varnished finish the face plies are selected for quality and color, and for painted finish the face plies may be the less expensive or nonselect grades.

The panel door consists of solid stiles and rails with panel fillers of various types. The most common panel door and the one which costs the least is one with five cross panels (fig. 110, *B*). Another

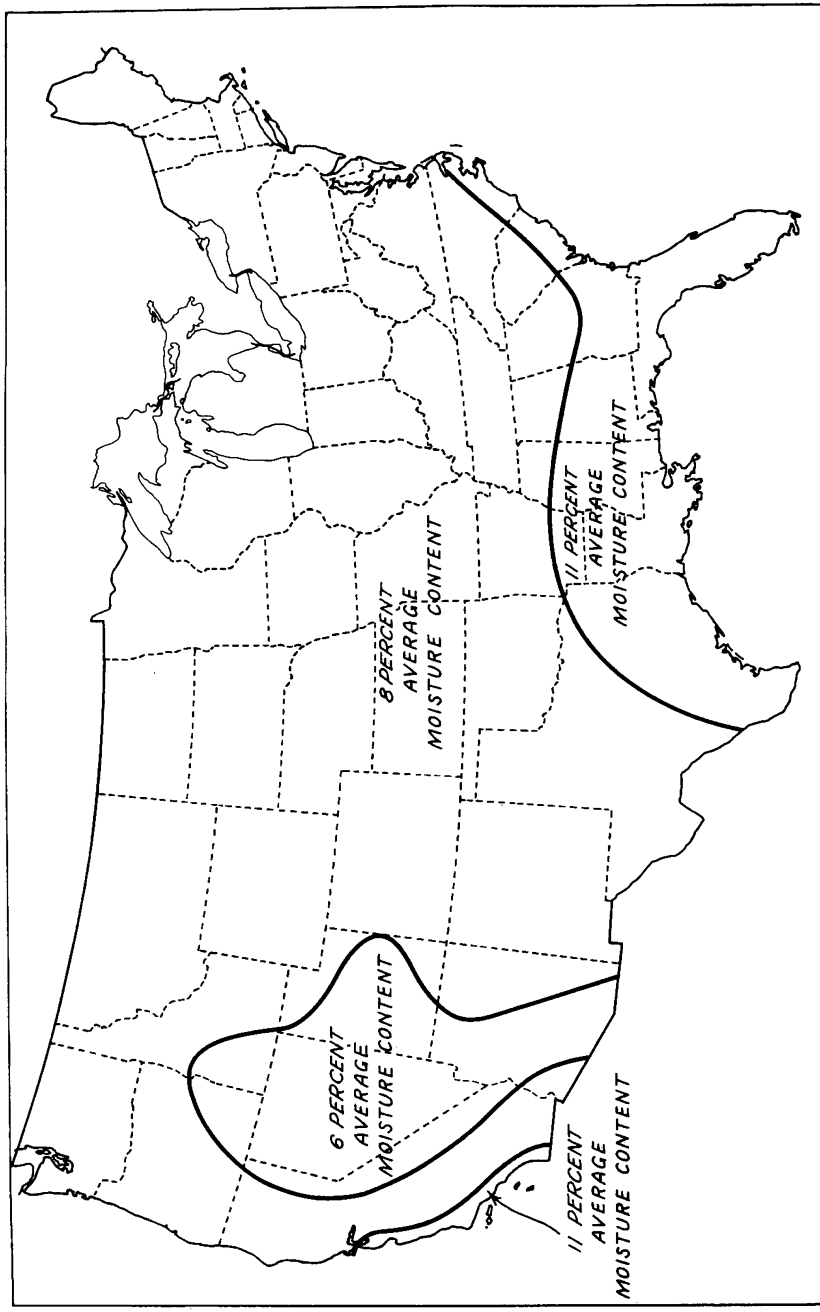

M 20143 F

FIGURE 108.—Recommended average moisture content for interior finish woodwork in various parts of the United States.

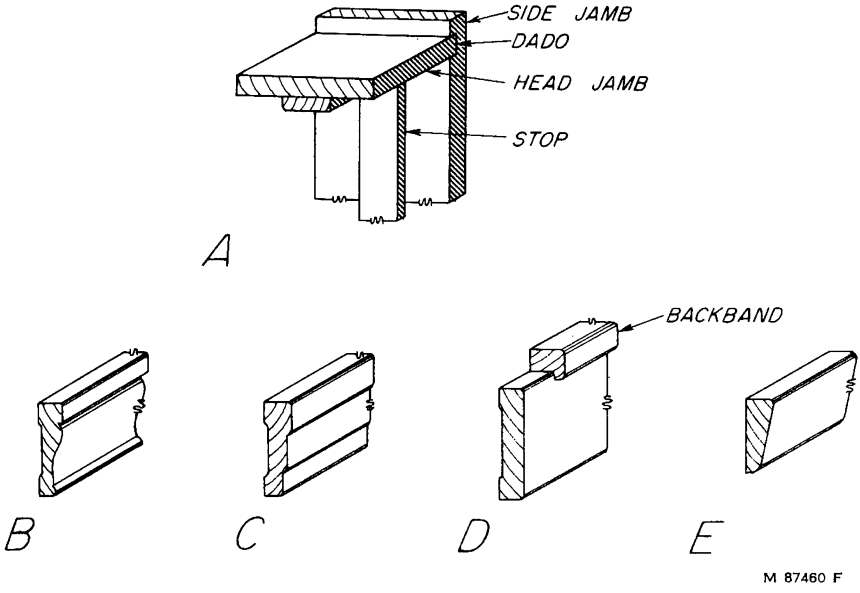

FIGURE 109.—Interior-trim parts. *A*, Doorjambs and stops; *B*, molded casing; *C*, recessed casing; *D*, plain casing with backband; *E*, modern casing.

common type is the two-panel door (fig. 110, *C*). Panel material may be of solid wood, plywood, or hardboard. The six-panel door with flat or solid raised panels (fig. 110, *D*) is often used for colonial interiors.

The single-panel door is best limited to narrow widths unless the plywood panel is at least ⅜ inch thick. These doors are often used for closets, with a mirror attached to one face by moldings (fig. 110, *E*). These moldings serve to reinforce the plywood panel.

Other types of special doors are obtainable with various kinds of closing hardware. The sliding door, in various combinations, is popular for wardrobe closets. Sliding doors of plywood should be kept as small as possible to minimize warping.

Doors should swing or be hinged so that they open in the direction of natural entry. Doors should also swing against a blank wall wherever possible and not be obstructed by other swinging doors.

Minimum width for doors to habitable rooms is 2 feet 6 inches, and minimum height is 6 feet 6 inches. These minimum sizes are intended to provide sufficient width for the movement of furniture.

Door frame and trim installation.—Setting the interior doorframe is done by means of shingles or wedges that are used between the side-jamb and rough-opening studs (fig. 111, *A*). Jambs are set plumb and square, shingles are wedged tightly, and the jambs are then nailed to the studs with eightpenny finishing nails through the shingles. Five sets of wedges or more are used at each jamb to hold them plumb, and shingles are sawed flush with the wall after nailing. Nails should be driven in pairs as shown in figure 111, *A*.

Casings are nailed to both the framing studs and the jambs. Casing is nailed at the stud with eightpenny finishing or casing nails,

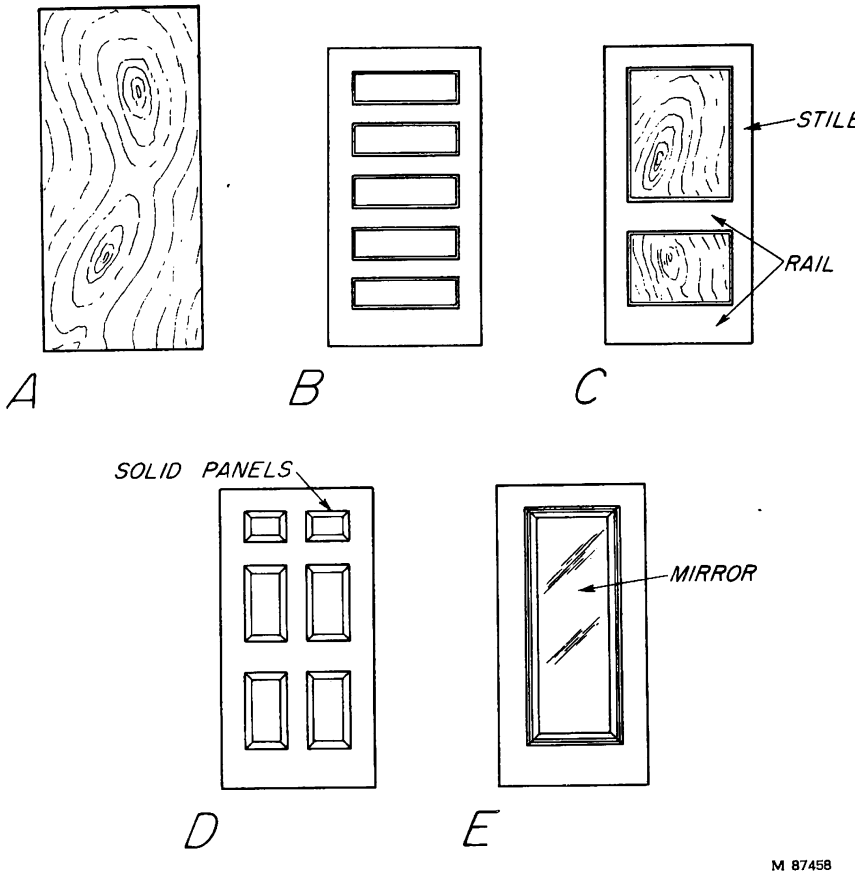

FIGURE. 110.—Types of interior doors. *A*, Flush; *B*, with five cross panels; *C*, two-panel; *D*, colonial; *E*, single-panel with mirror.

and with 1½-inch brads or sixpenny nails to the jamb in the case of a thin, narrow-line casing, as shown in figure 111, *A*. Nails should be spaced approximately 16 inches on center and should be set flush. Casing is placed with a 3/16- to ¼-inch margin on the jamb edge.

Where casing is ¾-inch thick, eightpenny nails may be used at the jamb as well as at the stud. In hardwood species it is good practice to predrill to prevent splitting.

Stops are ½ by 1⅝ inches for standard interior doorframes and are nailed to the jamb with 1½-inch brads after the door is hung. A bevel cut at the bottom of the stop will eliminate the dirt pocket and make cleaning of the floor easier.

Casing joints at the head of the frame are either butt jointed or mitered. A mitered joint is used when casing has a molded pattern (fig. 111, *B*). A butt joint may be used on a flat casing where thickness is constant (fig. 111, *C*). Backband may be used around the perimeter of this type of casing. Miter casing may be spline jointed

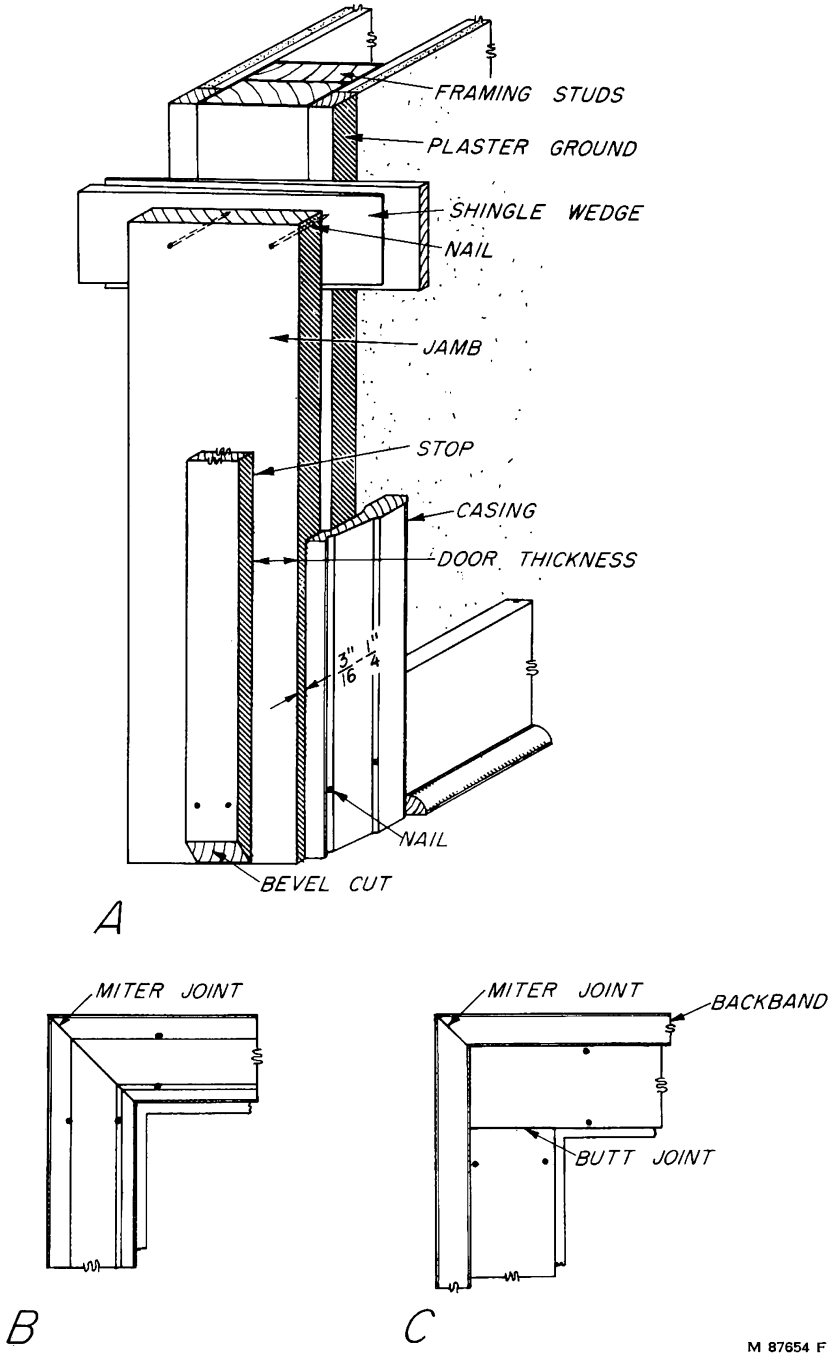

FIGURE 111.—Door frame and trim. *A*, Installation; *B*, mitered joint; *C*, butt joint for plain casing.

and glued. Mitered joints that are not glued sometimes open up when shrinkage occurs, but glued joints generally remain tight.

Door clearances.—Standard clearances with locations of hardware are shown in figure 112. These clearances may vary slightly, but they are used by a large percentage of craftsmen. Hinge distances are shown as 7 inches at the top and 11 inches at the bottom, but these may vary slightly, especially in panel doors. Where three hinges are used the center hinge is spaced midway between the top and bottom hinges. Standard knob height is 38 inches, and locks or latches should be installed accordingly.

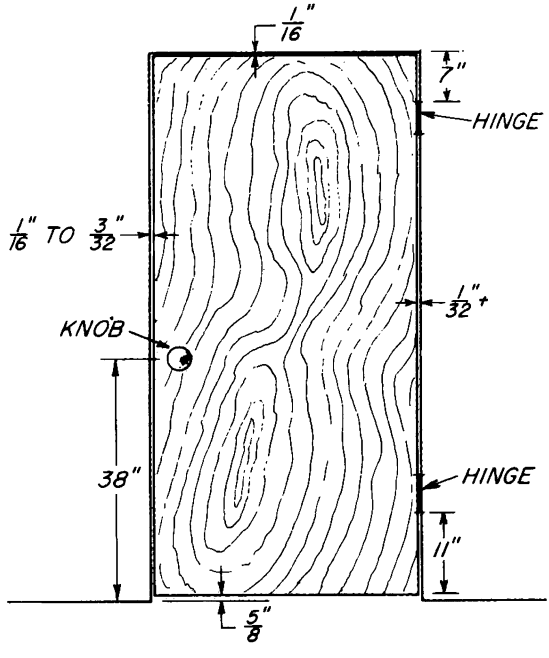

M 87459 F

FIGURE 112.—Door clearances.

Clearances should be 1/16 to 3/32 inch on the latch side and 1/32 inch on the hinge side. A clearance of 1/16 inch at the top and 5/8 inch at the bottom may be used. If the door is to swing across heavy carpeting, the bottom clearance may be slightly more. Thresholds are used under exterior doors to close the space allowed for clearance. Weather strips around exterior door openings are very effective in reducing air infiltration.

Special doorframes.—Some manufacturers supply prefitted doorjambs and doors, with the hinge slots routed ready for installation. Also on the market is a sheet-metal door buck with formed stops and casing. Hinge slots and strike plates are integral with the units. These bucks are supplied with nailing clips, and the frame is plumbed and nailed in place before plastering is done.

Installation of Door Hardware

Hinges.—It is common practice to use 3 hinges (or butts) on exterior doors and 2 hinges on interior doors. There is some tendency for doors to warp or twist because of the differences in exposure on opposite sides, and the 3 hinges reduce this tendency. Even inside doors may tend to twist somewhat.

Hinges should be of the proper size for the door they support. For 1¾-inch-thick doors, use 4- by 4-inch butts; for 1⅜-inch doors, 3½- by 3½-inch butts. After the door is fitted to the framed opening, with the proper clearances, the hinges are fitted to the door. The hinges are routed into the door edge with a ⅛-inch back distance (fig. 113, *A*). The hinge halves should be set flush with the surface and must be fastened square.

The door is now placed in the opening and blocked up at the bottom for proper clearance. The jambs are marked at the hinge locations, and the loose hinge halves are routed and fastened in place. The door may now be placed in the opening, and the pins may be slipped in place. If hinges have been installed correctly and the jambs are plumb, the door will swing freely.

Locks.—There are a number of types of door locks differing with regard to installation, in first cost, and in the amount of labor required to set them. Lock sets are supplied with instructions that should be followed for installation. The center of the doorknob should be set 38 inches above the floor.

Strike plate.—Mark the location of the latch on the doorjamb and locate the strike plate in this way. Rout out the marked outline with a chisel and also route for the latch (fig. 114, *A*). The strike plate should be flush with or slightly below the face of the doorjamb. When the door is latched the face of the door should be flush with the edge of the jamb.

Doorstop.—The doorstops may have been set temporarily during the installation of the hardware, but now is the time to nail the stops in place. The stop at the jamb on the latch side may be nailed first (fig.

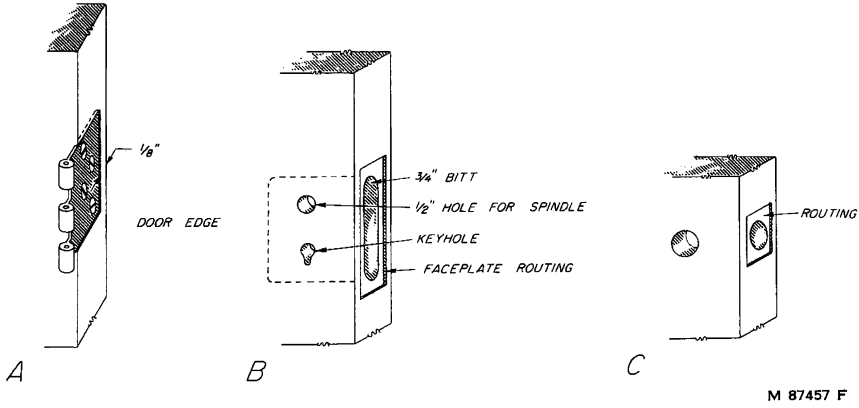

FIGURE 113.—Installation of door hardware. *A*, Hinge; *B*, mortise lock; *C*, simple mortise lock.

304696 O—55——10

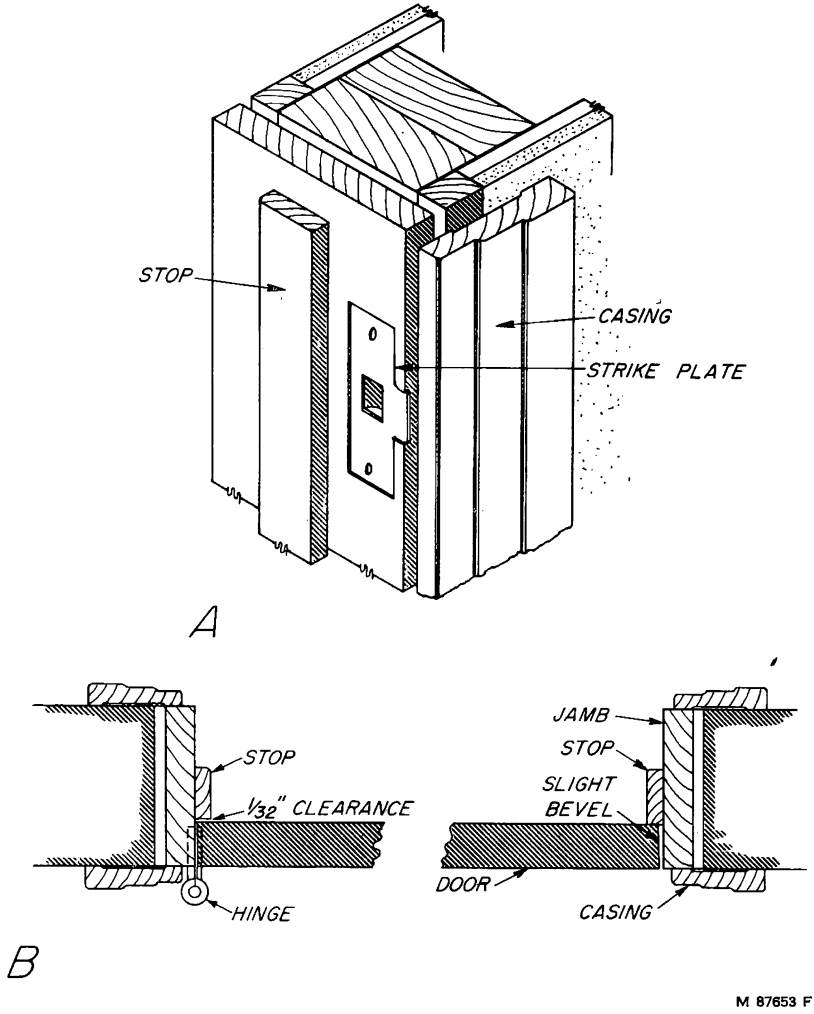

FIGURE 114.—Installation of (*A*) typical strike plate and (*B*) stops.

114, *B*) and should be set up tight against the door face when the door is latched. The stop at the joint on the hinge side may be nailed next and should be given a 1/32 inch clearance from the door face. This is to prevent scraping as the door is opened. The head jamb stop is then nailed in place. Remember that when door and trim are painted, some of the clearances allowed will be taken up.

Window-Trim Installation

Casing for window trim should be of the same pattern (*33*, *52*) as that selected for door casing (fig. 115). Other trim parts consist of sash stops, the stool, and the apron.

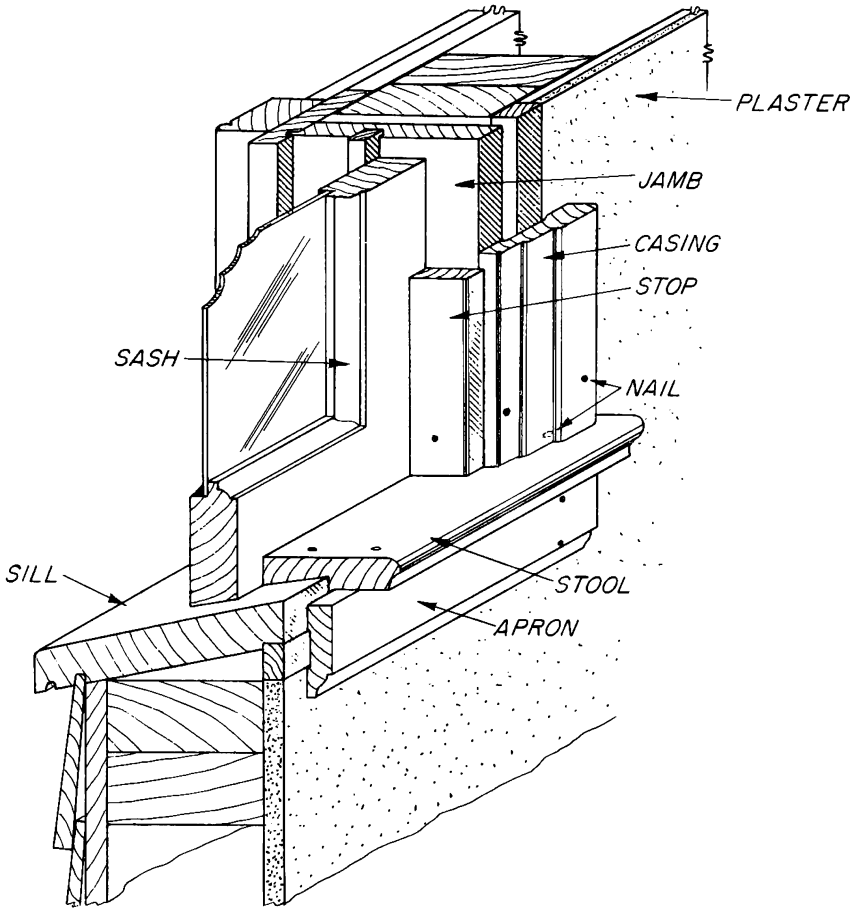

M 87655 F

FIGURE 115.—Installation of window trim.

The stool is the horizontal trim member that laps the window sill and extends beyond the casing. The apron serves as a finish member below the stool. The window stool is the first piece to be installed and is fitted against the inside of the jamb and the plaster line, with the outside face being flush against the bottom rail of the window sash (fig. 115). The stool is blind nailed at the ends so that the casing will cover the nailheads. Predrilling is usually necessary to prevent splitting. The stool should also be nailed at midpoint to the sill and to the apron with finishing nails.

The casing is applied as in doorframes, except that the inner edge is flush with the inner face of the jambs so that the stop will cover the joint between the jamb and casing. The window stops are then nailed to the jambs so that the window sash slides smoothly. The apron is cut to a length equal to the outer width of the casing line. The apron is nailed to the window sill and to the 2-by-4 framing sill.

Base and Ceiling Moldings

Base moldings.—Base molding may vary in width and form (*52*). It serves as a finish between the wall and the floor. Two-piece base (fig. 116, *A*) consists of baseboard topped with a base molding that is made to conform to the wall even when plaster is not true and straight. Quarter-round shoe molding is shown at the bottom of the base. Figure 116, *B*, shows an ogee one-piece base with base shoe. Figure 116, *C*, shows a simple one-piece base without shoe. This molding must be 1⅛ to 1¼ inches thick at the bottom to span the flooring joint and sufficiently high to cover the plaster ground.

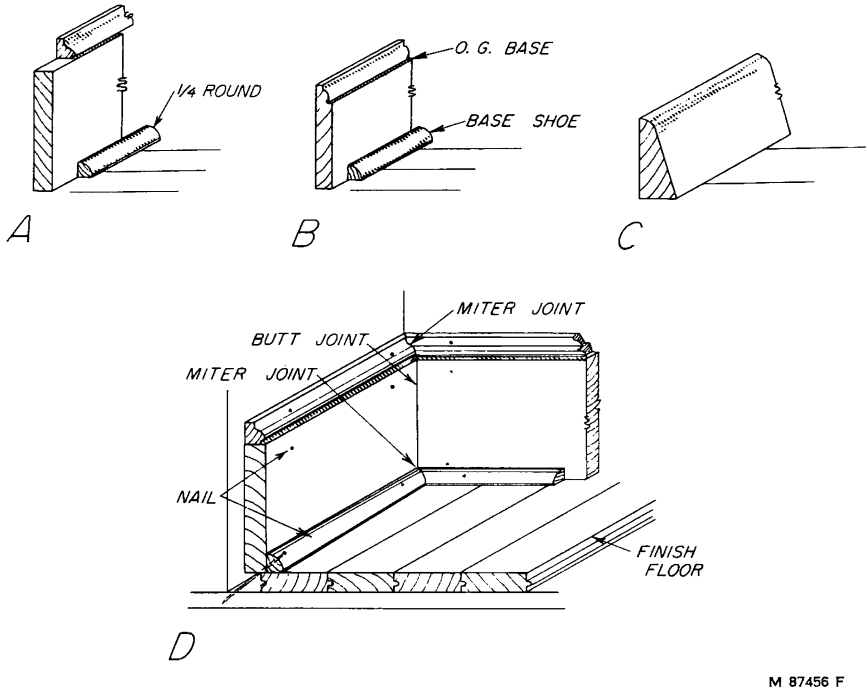

FIGURE 116.—Base molding. *A*, Two-piece; *B*, ogee; *C*, modern; *D*, installation of baseboard.

Installation of base molding.—The baseboard is nailed to the wall at the stud lines with eightpenny finishing nails. Joints at inside corners should be butt and coped joints (fig. 116, *D*). The bottom of the base should clear the top of the finish floor. Baseshoe molding is nailed through the finish floor to the subfloor. A long thin nail should be used for this purpose.

Ceiling moldings.—Ceiling moldings are placed at the junction of the wall and the ceiling (fig. 117). They are often used for architectural effect or, in the case of dry-wall construction, are sometimes used to cover the butt joints of the wall and ceiling coverage. A cutback top edge will make painting easier where there is a difference in color

between ceiling and molding. This type of cutback will partially conceal and minimize any unevenness that often occurs in ceiling and surfacing materials. A smaller molding may be used to finish a dry-wall interior at the ceiling and wall juncture.

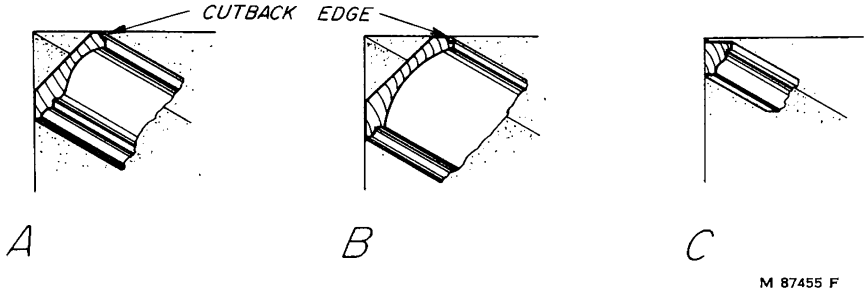

FIGURE 117.—Ceiling moldings. *A*, Crown; *B*, cove; *C*, for dry-wall finish.

MILLWORK

Cases, kitchen cabinets, shelving, mantels, and similar types of millwork are installed at the same time as the interior trim. This work is ordinarily done after the finish floor is in place.

There are three general types of cabinets, cases, and similar units used in present-day construction: (a) the job-built type constructed in place by the carpenter; (b) the custom- or shop-built type; and (c) prefabricated units or stock cabinets that may be obtained in 3-inch width increments beginning at 15 inches with a maximum of 36 inches. Some cabinet widths are based on 4-inch increments beginning at 12 inches with a maximum of 48 inches.

As in the case of interior trim, which is also classed as millwork, the cabinets, shelving, and other similar items can be made of various species. If the millwork is to be painted, ponderosa pine, southern pine, Douglas-fir, gum, and other species may be used. Birch, oak, and redwood are some of the woods that are finished with varnish or sealers.

The recommended moisture content for cases and other interior millwork may vary from 6 to 11 percent in different parts of the country. These areas, together with the moisture contents, are shown on the moisture-content map, page 136.

Kitchen Cabinets

The kitchen deserves special attention, since it represents the area where the housewife spends a large part of her time. An efficient arrangement of kitchen cabinets, refrigerator, sink, and range reduces work and saves steps. Good lighting and cheerful decorations provide their own reward.

Because of high present-day construction costs, it is often necessary to eliminate the dining room in house design (*21*). This gives the kitchen more importance as an informal dining area and emphasizes the need for a kitchen layout that provides a suitable dinette.

Base units of kitchen cabinets are approximately 36 inches high and 24 inches deep with the counter top. Wall units, set 15 to 18 inches above the counter, are 28 to 36 inches high and 12½ inches deep. Various combinations of drawers and doors in base cabinets may be obtained or made. Wall cabinets are often used under a drop ceiling (fig. 118), or cabinets may be made with two sets of doors and installed without a drop ceiling. Since the top cabinets are less accessible, they serve mainly for storage. Wall cabinets are generally provided with two adjustable shelves. Sink fronts may be used at the sink with doors and storage shelves. Counter tops may be covered with linoleum, tile, or any one of several suitable plastic coverings. Corner cabinets, with doors opening at a 45° angle, may be obtained for wall or base use.

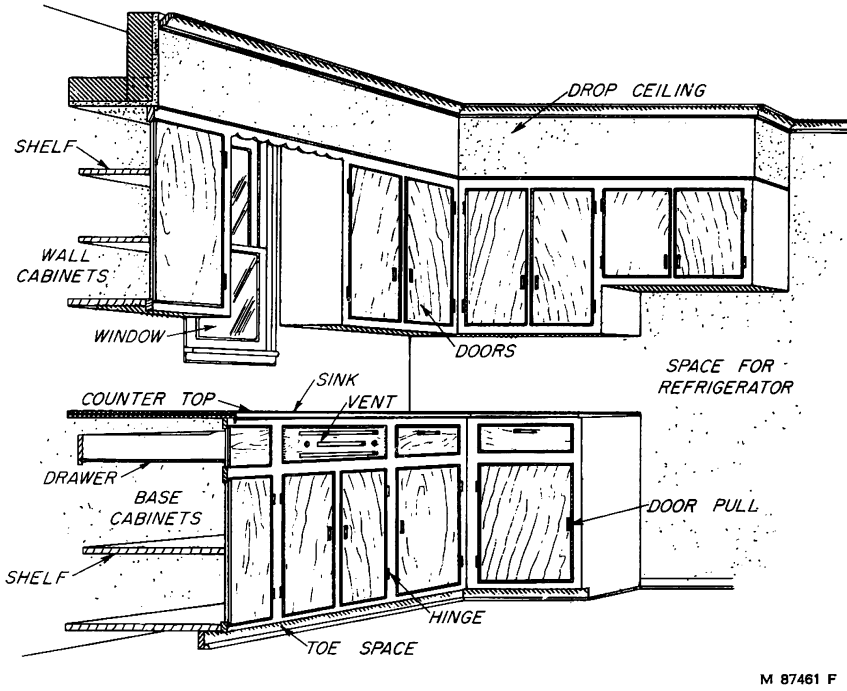

FIGURE 118.—An arrangement of kitchen cabinets.

Closets

Linen closets are commonly of two types; (a) those with standard doors and cased openings with shelving installed on the interior (fig. 119, *A*); and (b) built-in closets with doors and drawers (fig. 119, *B*). Many variations are possible.

Wardrobe closets are commonly provided with a standard interior door and with the closet supplied with shelves and closet poles (fig. 119, *C*).

One of the popular types of clothes-storage units used in present house construction is the wardrobe. While this type of unit costs

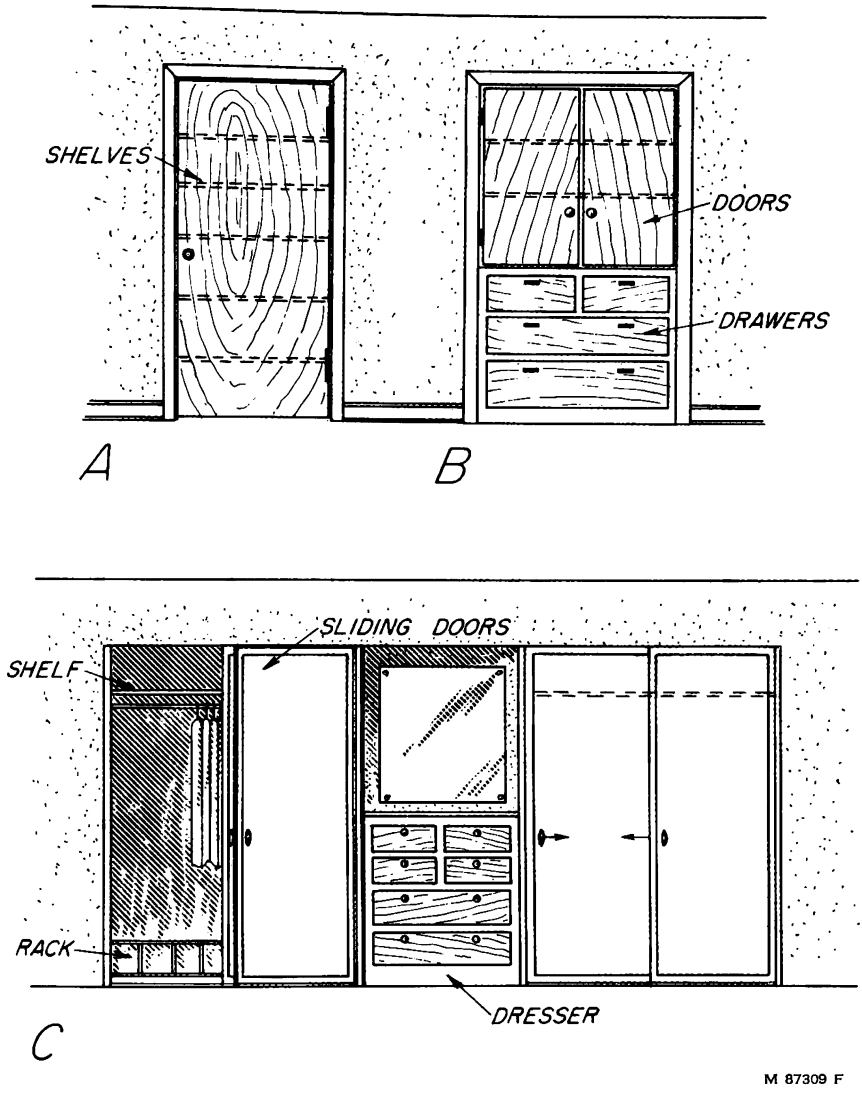

FIGURE 119.—Storage closets. *A*, with shelves; *B*, with shelves and drawers; *C*, wardrobe.

more than a standard opening, the inclusion of dressers and chests of drawers eliminates the need for much of the bedroom furniture.

The use of sliding doors in pairs or in other multiple combinations is becoming popular. These doors consist of flush doors or framed panels hung on a track with rollers fastened to the doors. Sliding doors with track and hardware can be obtained from various manufacturers. Such wardrobes may have extension rods so installed that the rods holding garment hangers may be pulled out of the wardrobe for the selection of the desired garments.

Cabinets

Another item of millwork often included in interior finish is the china cabinet. One type is the corner cabinet (fig. 120, *A*). These are ordinarily shop built and require only fastening in place and the fitting of appropriate moldings. The corner china case is often used in pairs in the dining room. Doors may be glazed, and interior shelves are supplied in both the upper and lower cabinets.

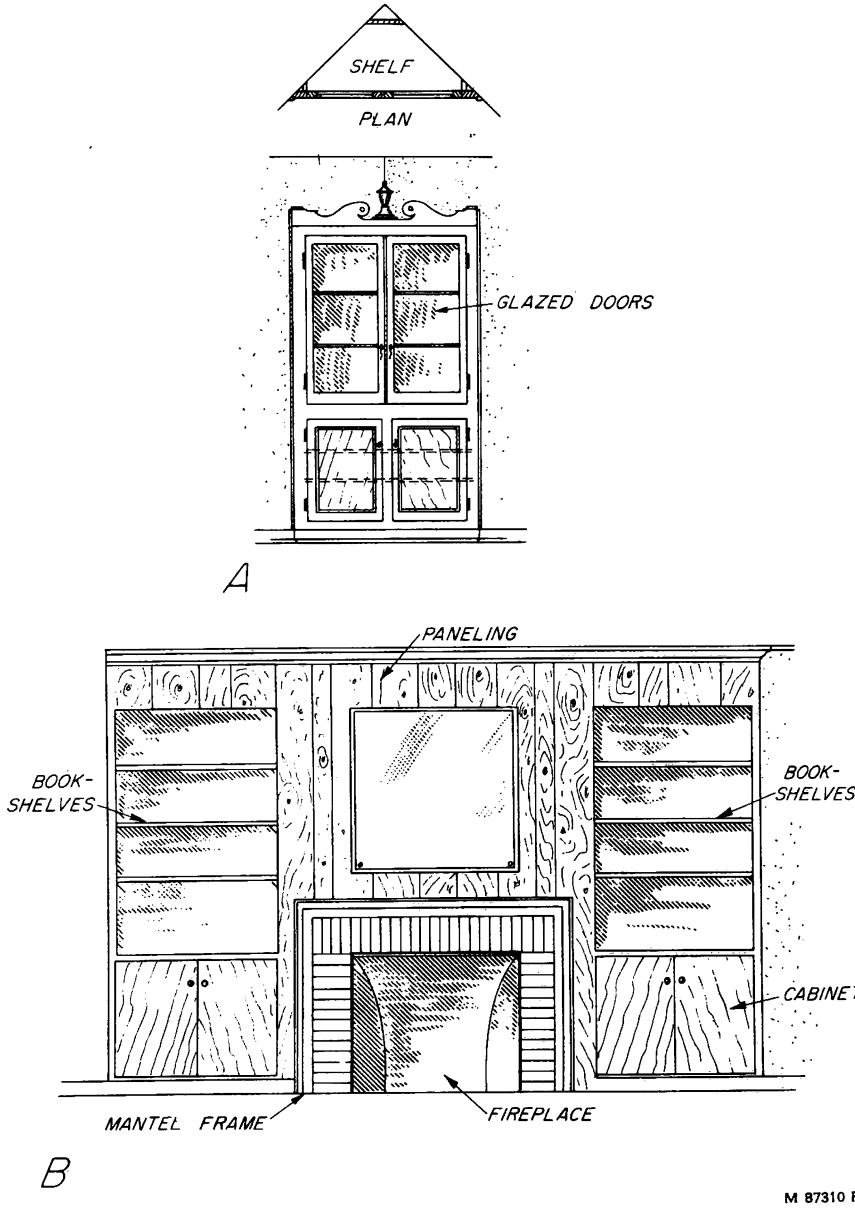

FIGURE 120.—*A*, Corner china cabinet; *B*, mantel and shelving.

Fireplace Millwork

Fireplace mantels, fireplace frames, shelving, and special wall treatments may also be classed as millwork and are often shop built. Fireplace mantels may vary from simple molding to elaborate colonial types with fluted pilasters and ornamental caps (fig. 120, *B*). Bookshelves and cabinets are frequently made a part of fireplace design, with good results.

STAIRS

Stairways (*18*) should be so designed, arranged, and installed as to afford safety, adequate headroom, and space for the passage of furniture. In general, there are two types of stairs in a house, those serving as principal stairs and those used as service stairs. The principal stairs are designed to provide ease and comfort and are often made a feature of design, while the service stairs leading to the basement or attic are usually somewhat steeper and constructed of less expensive materials.

Stairs may be built in place, or they may be built as units in the shop and set in place. Both have their advantages and disadvantages, and custom varies with locality.

Stairways may have a straight, continuous run with or without an intermediate platform, or they may consist of two or more runs at angles to each other. In the best and safest practice a platform is introduced at the angle, but the turn may be made by radiating risers called winders.

The diagrams shown in figure 121 are for nonwinder stairways, which are most frequently encountered in the residential planning problem. Winders have not been included, because they represent a stair condition generally regarded as undesirable. However, use of winders is sometimes necessary because of cramped space. In such instances, winders should be adjusted to replace landings so that the width of the tread 18 inches from the narrow converging end will not be less than the tread width on the straight run.

Terms

The terms generally used in stair design (and shown in figs. 122–127) may be defined as follows:

Balusters, the vertical members supporting the handrail on open stairs.

Carriage, rough timber supporting the treads and risers of wood stairs (sometimes referred to as strings or stringers).

Handrail, the top finishing piece on the railing intended to be grasped by hand in ascending and descending. For closed stairs where there is no railing, the handrail is attached to the wall with brackets.

Landing, floor at top or bottom of each story where flight ends or begins.

Newel, the main post of the railing at the start of the stairs and the stiffening posts at the angles and platform.

Nosing, projection of tread beyond face of riser.

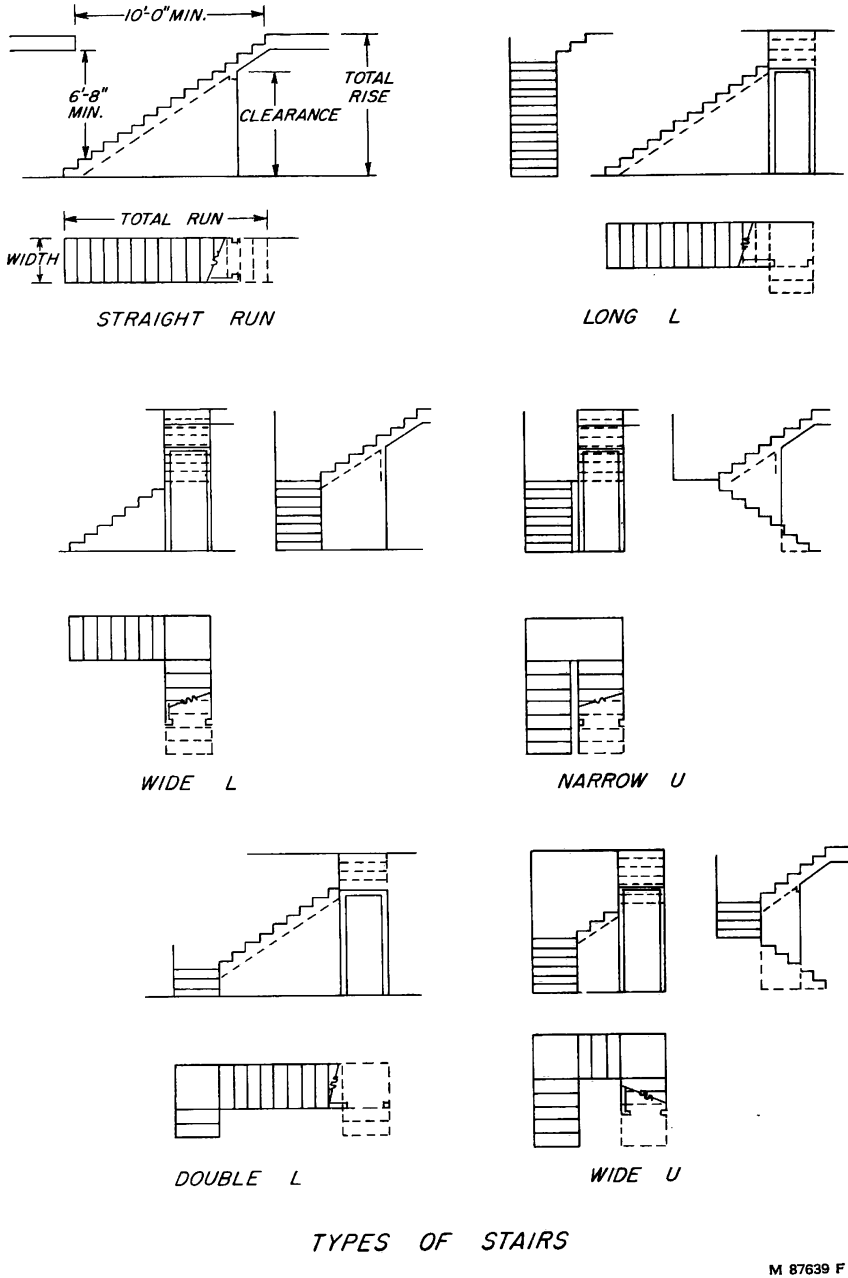

FIGURE 121.—Types of nonwinder stairs.

Platform, the intermediate area between two parts of a flight.
Railing, the protection on the open side of a run of stairs.
Rise, total height from floor to floor.
Riser, vertical face of step.

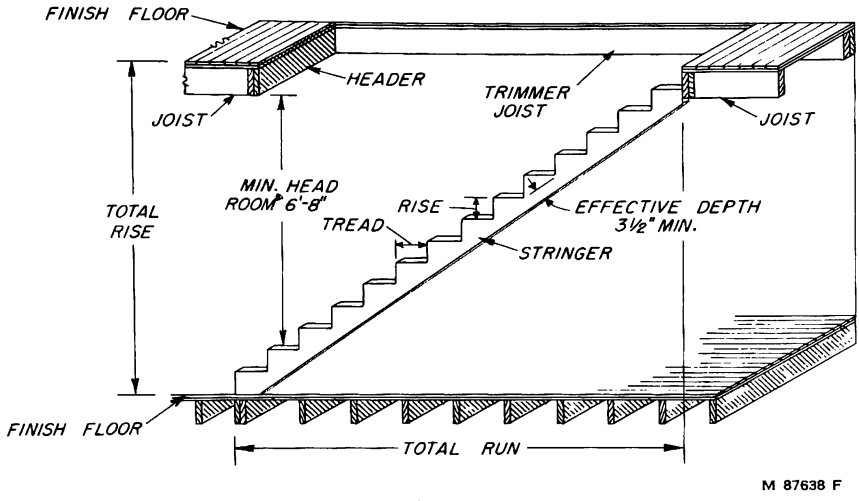

FIGURE 122.—Stairway design.

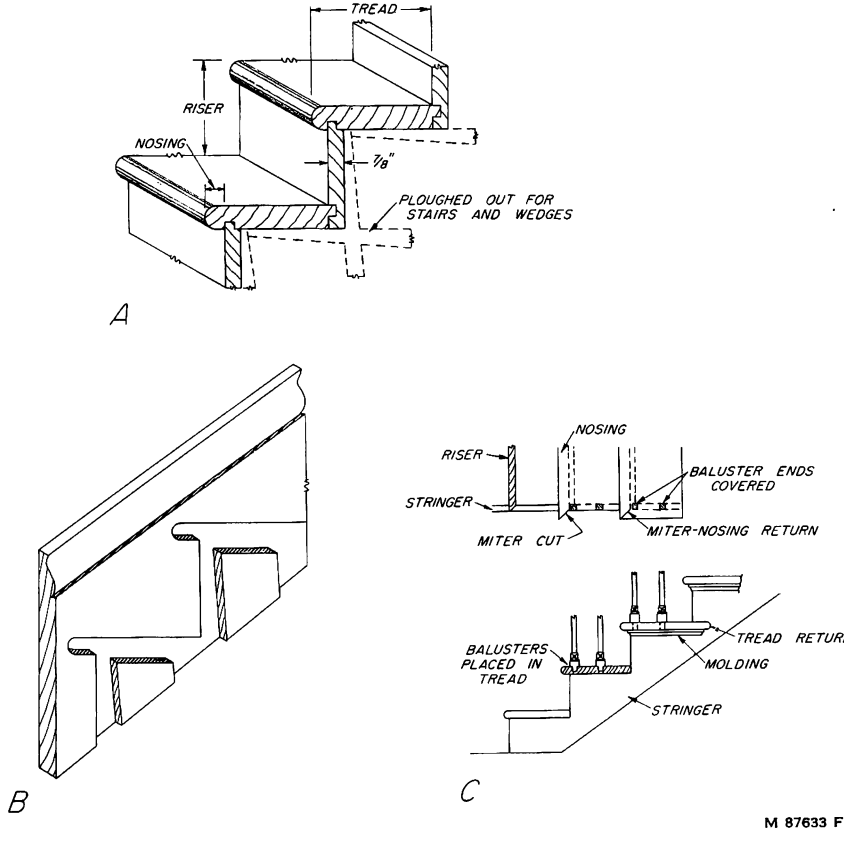

FIGURE 123.—Parts of stairs. *A*, Risers and tread; *B*, housed stringers; *C*, other parts.

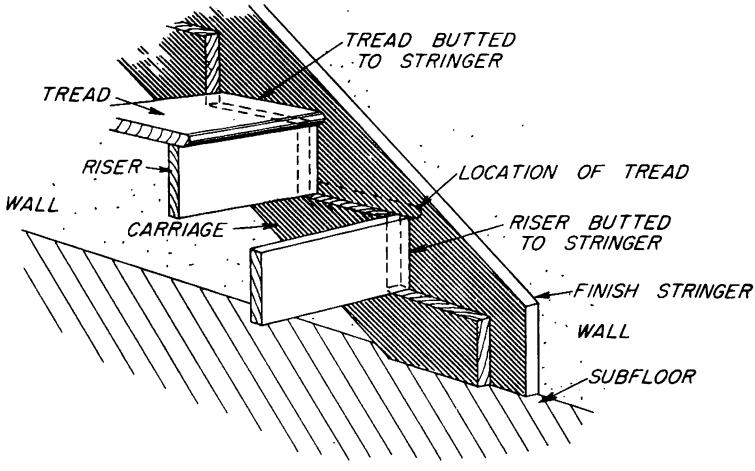

M 87635 F

FIGURE 124.—Finish wall stringer and carriage.

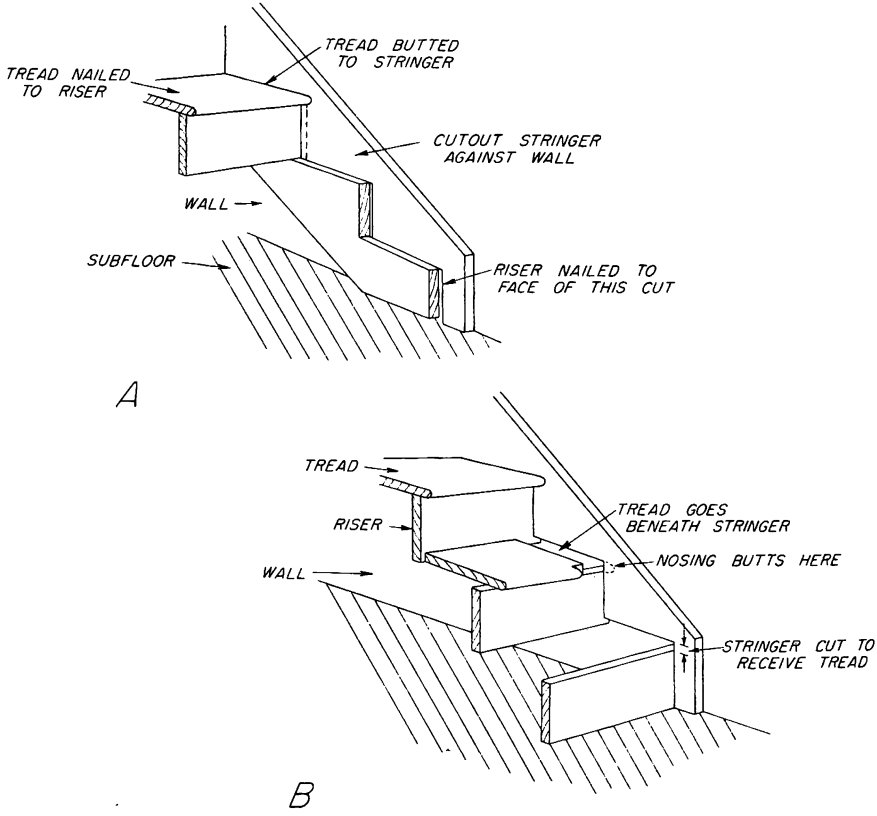

M 87720 F

FIGURE 125.—Stringers and treads. *A*, Cutout stringer; *B*, notched treads.

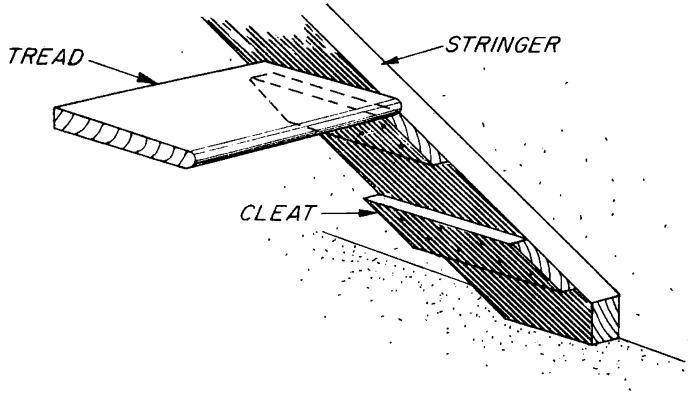

M 95475 F

FIGURE 126.—Basement carriage. Cleat stair.

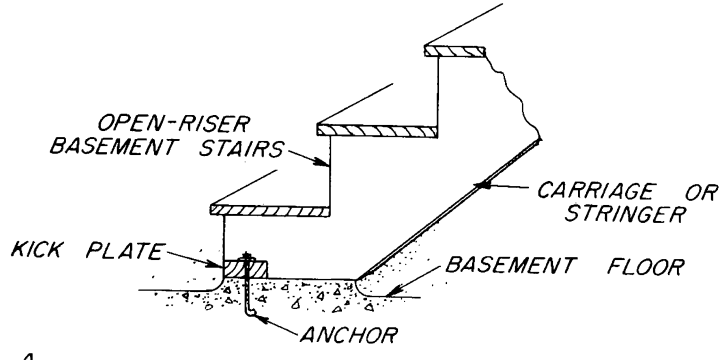

A

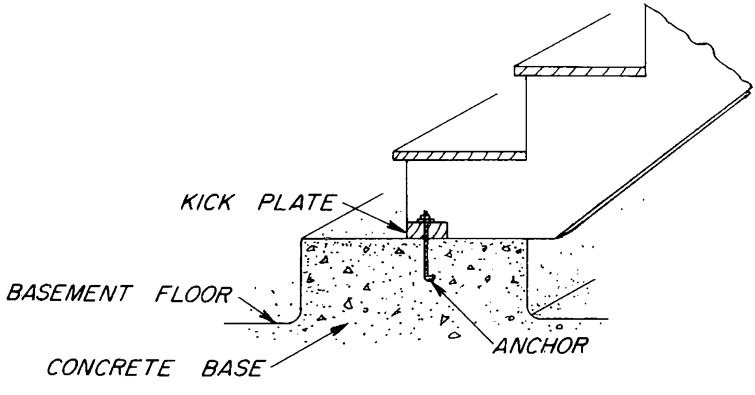

B

M 87637 F

FIGURE 127.—Basement-stair terminations. *A*, Anchored to basement floor; *B*, anchored to concrete base.

Run, total length of stairs including platform.

String or stringer, one of the inclined sides of a stair supporting the treads and risers. Also, a similar member, whether a support or not, such as finish stock placed exterior to the carriage on open stairs and next to the walls on closed stairs to give finish to the staircase. Open stringers, both rough and finish stock, are cut to follow the lines of the treads and risers. Closed stringers have parallel sides, with the risers and treads being housed into them (figs. 123–126).

Tread, horizontal face of a step.

Winders, radiating or wedge-shaped treads at turns of stairs.

Ratio of Riser to Tread

There is a definite relation between the height of a riser and the width of a tread, and all stairs should be laid out to conform to well-established rules governing these relations. If the combination of run and rise is too great, the steps are tiring, there is a strain on the leg muscles and on the heart; and if too short, the foot may kick the riser at each step and an attempt to shorten the stride may be tiring. Experience has proved that a riser 7 to 7½ inches high with appropriate tread combines both comfort and safety, and these limits therefore determine the standard height of risers commonly used for principal stairs. Service stairs may be narrower and steeper than the principal stairs, and are often unduly so, but it is well not to exceed 8 inches for the risers. As the height of the riser is increased, the width of the tread must be decreased for comfortable results. A very good ratio is provided by either of the following rules, which are exclusive of the nosing:

Tread plus twice the riser equals 25.
Tread multiplied by the riser equals 75.

A riser of 7½ inches would, therefore, require a tread of 10 inches; and a riser of 6½ inches, a tread of 12 inches. Treads are rarely made less than 9 inches or more than 12 inches wide. The treads of main stairs should be made of hardwood.

Design of Stairway

The location and the width of a stairway, together with the platforms, having been determined, the next step is to fix the height of riser and width of tread. A suitable height of riser is chosen, and the exact distance between the finish floors of the two stories under consideration is divided by the riser height. If the answer be an even number, the number of risers is thereby determined. It very often happens, however, that the result is uneven, in which case the story height is divided by the whole number next above or below the quotient. The result of this division gives the height of the riser. The tread is then proportioned by one of the rules for ratio of riser to tread.

Assume that the total height from one floor to the top of the next floor is 9 feet 6 inches, or 114 inches, and that the riser is to be approximately 7½ inches. Then 114 inches divided by 7½ inches would give

$15\frac{1}{5}$ risers. However, the number of risers must be a whole number. Since the nearest whole number is 15, it may be assumed that there are to be 15 risers, in which case 114 divided by 15 equals 7.6 inches, or approximately $7\frac{9}{16}$ inches for the height of each riser. To determine the width of tread, multiply the height of riser by 2 ($2\times7\frac{9}{16}=15\frac{1}{8}$) and deduct from 25 ($25-15\frac{1}{8}=9\frac{7}{8}$ inches).

The headroom is the vertical distance from the top of the tread to the underside of flight or ceiling above (fig. 122). Although it varies with the steepness of the stairs, the minimum allowed would be 6 feet 8 inches.

Framing of Stair Well

When large openings are made in floors, such as for stair wells, one or more joists must be cut. The location of openings in the floor has a direct bearing on the method of framing the joists.

The principles explained in Floor Framing, page 22, may be referred to in considering the framing around openings in floors for stairways. The framing members around these openings are generally of the same depth as the joists. Figure 128 shows typical framing around stair wells and landings.

Headers are short beams at right angles to regular joists at ends of the floor opening. They are doubled and support the ends of the joists that have been cut off. Trimmer joists are at the sides of the floor opening and run parallel to regular joists. They are doubled and support the ends of the headers. Tail joists are joists that run from the headers to the bearing partition (*24*).

Stringers or Carriages

The treads and risers are supported upon stringers or carriages that are solidly fixed in place level and true upon the framework of the building. The stringers may be cut or ploughed to fit the outline of the tread and risers. A third stringer should be installed in the middle of the stairs when the treads are less than $1\frac{1}{8}$ inches in thickness and the stairs are more than 2 feet 6 inches in width. In some cases rough stringers are used during the construction period. These have rough treads nailed across the stringer for the convenience of workmen until the wall finish is applied.

When the wall finish is completed, the finish stairs, which have been made in a shop, are erected or built in place. (This work is generally done by a stairbuilder, who often operates as a member of a separate specialized craft.)

The wall stringer may be ploughed out (fig. 123, *A*, *B*) to the exact profile of the tread, riser, and nosing, with sufficient space at the back to take the wedges. The top of the riser is tongued into the front of the tread, and the back of the tread into the bottom of the next riser (fig. 123, *A*). The wall stringer is spiked to the inside of the wall, and the treads and risers are fitted together and forced into the wall stringer nosing, where they are set tight by driving and gluing wood wedges behind them. The wall stringer thus shows above the profiles of the tread and risers as a finish against the wall and is often made continuous with the baseboard of the upper and lower landing.

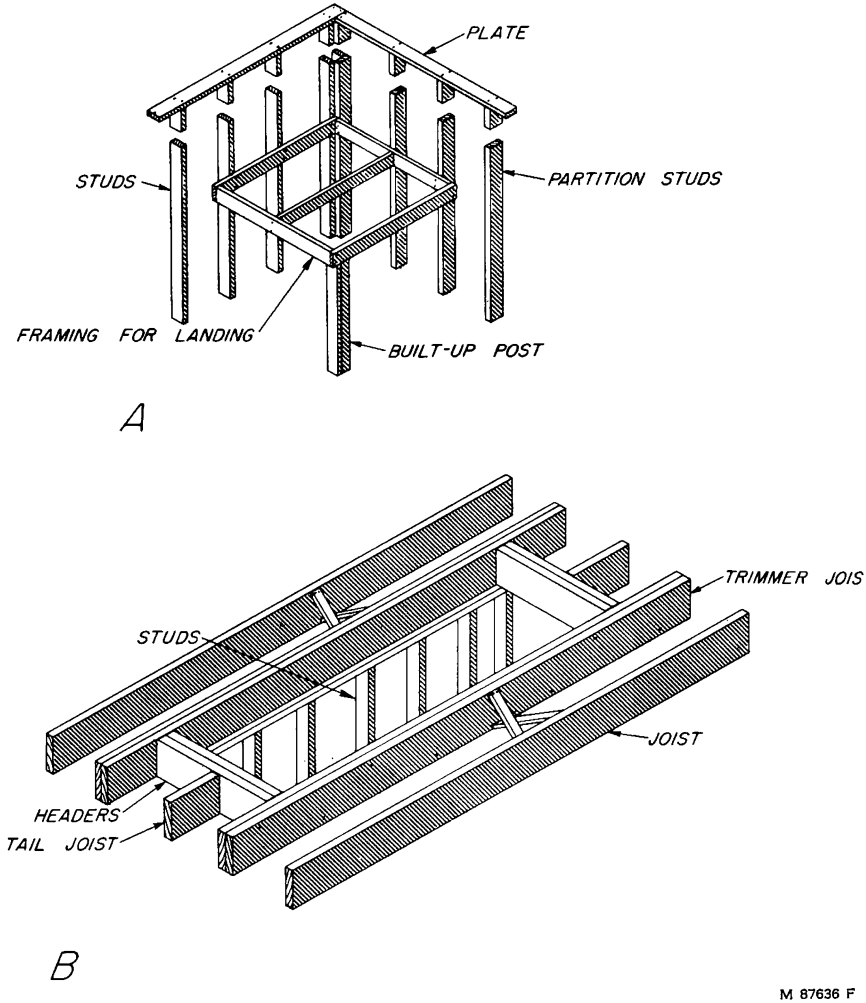

FIGURE 128.—Framing of stairs. *A*, For landing; *B*, for straight-run stair well.

If the outside stringer is an open stringer, it is cut out to fit the risers and treads and nailed against the outside carriage. The edges of the risers are mitered with the corresponding edges of the stringer, and the nosing of the tread is returned upon its outside edge along the face of the stringer (fig. 123, *C*). Another method would be to butt the stringer to the riser and cover the joint with an inexpensive stair bracket.

Figure 124 shows a finish stringer nailed in position on the wall and the rough carriage nailed in place against the stringer. If there are walls on both sides of the staircase, the other stringer and carriage would be located in the same way. The risers are nailed to the riser cuts of the carriage on each side and butt against each side of the stringer. The treads are nailed to the tread cuts of the carriage and

butt against the stringer. This is the least expensive of the types described and perhaps the best type of construction to use when the treads and risers are to be nailed to the carriages.

Another method of fitting the treads and risers to wall stringers is shown in figure 125, *A*. The stringers are laid out with the same rise and run as the stair carriages, but they are cut out in reverse. The risers are butted and nailed to the riser cuts of the wall stringers, and the assembled stringers and risers are laid over the carriage. Sometimes the treads are allowed to run underneath the tread cut of the stringer. This makes it necessary to notch the tread at the nosing to fit around the stringer (fig. 125, *B*).

Newels and Handrails

All stairways should have a handrail from floor to floor. For closed stairways the rail is attached to the wall with suitable metal brackets. The rail should be set 2 feet 8 inches above the tread at the riser line. Handrails and balusters are used for open stairs and for open spaces around stairs. The handrails end against newel posts.

Stairs should be laid out so that stock parts may be used for newels, rails, balusters, goosenecks, and turnouts. These parts are a matter of design and appearance; they may be very plain or elaborate, but they should be in keeping with the style of the house. The balusters are doweled or dovetailed into the treads and in some cases are covered by a return nosing (fig. 123, *C*). Newel posts should be firmly anchored, and where half newels are attached to a wall, blocking should be provided at the time the wall is framed.

Basement Stairs

Basement stairs may be built either with or without riser boards. Cutout stringers are probably the most widely used supports for the treads, but the tread may be fastened to the stringers by cleats (fig. 126). Figure 127 shows two methods of terminating basement stairs at the floor line.

Disappearing Stairs

Where attics are used primarily for storage and where space for a fixed stairway is not available, hinged or disappearing stairs are often used. Such stairways may be purchased ready to install. They operate through an opening in the ceiling of a hall and swing up into the attic space, out of the way when not in use. Where such stairs are to be provided, the attic floor should be designed for regular floor loading.

Exterior Stairs

Proportioning of risers and treads in laying out porch steps or approaches to terraces should be as carefully considered as is the design of interior stairways. Similar riser-to-tread ratios can be used; however, the riser used in principal exterior steps should be between 6 and

304696 O—55——11

7 inches. The need for a good support or foundation for outside steps is often overlooked. Where wood steps are used, the bottom step should be of concrete. Where the steps are located over backfill or disturbed ground, the foundation should be carried down to undisturbed ground.

SHEET-METAL WORK

The sheet-metal (*18*) work in house construction consists normally of flashing, gutters, and downspouts. Attic ventilators and roof decks may also be made of metal.

Flashing is provided where necessary to prevent the entry of water through joints in materials that, in the absence of flashing, would not be watertight. Proper installation of flashing is therefore important, and care should be used in the selection and location of these materials.

Gutters are installed at the cornice line of the roof to collect water runoff and to carry it to downspouts that, in turn, carry the water to the ground, where other means should be provided to carry it away from the foundation area. Downspouts are sometimes connected to storm sewers.

Materials most commonly used for sheet-metal work are copper, galvanized sheet metal, aluminum, and tin. Near the seacoast, where the salt in the air may corrode galvanized sheet metal, copper is preferred for gutters, downspouts, and flashings. Where not subject to a corrosive atmosphere, the less expensive galvanized iron may be used. Molded wood gutters, cut from solid pieces of Douglas-fir or redwood, are also used in coastal areas because they are not affected by the corrosive atmosphere. Wood gutters are attractive in appearance and are preferred to metal gutters by some builders (*35*).

The minimum weights and types of materials recommended for flashing are as follows: Copper, 16-ounce soft (roofing temper); galvanized sheet metal, 26-gage, 1.25-ounce (total weight coating both sides) zinc coating per square foot; tin, 40-pound coating (should be painted on both sides before application). For gutters and downspouts, copper should be 16-ounce, hard (cornice temper) metal; galvanized sheet metal should be 26-ounce metal.

Flashing

Flashing may be used at the junction of roofs and walls, terrace and porch slabs, roofs and chimneys, over window and door openings, in roof valleys, and at other critical areas.

A typical example of construction requiring flashing is at the intersection of two types of materials, as shown in figure 129, *A*. The stucco is separated from the wood siding below by a wood drip cap installed over a frieze board. Formed flashing is installed against the sheathing and over the drip cap to allow an extension for an edge drip to prevent the water from running under the flashing. Flashing should extend at least 4 inches above the drip cap. This type of flashing is also used over the heads of windows and doors, especially where the cornice affords no protection to the head of the window opening. Where the flashing at heads of openings in frame walls is not exposed to the weather more than 2 inches, 3-ounce copper-coated building

paper may be used, blind-tacked at outside edge with nails 1 inch apart. The heads and sills of openings in masonry-veneered wood frame walls should be flashed. Head flashing should extend from the front edge of the lintel, up and over the top of the lintel, and up on the sheathing under the sheathing paper. Sill flashing should extend under the masonry sill up to the underside of the wood sill. The 3-ounce copper-coated building paper may be used for such flashing.

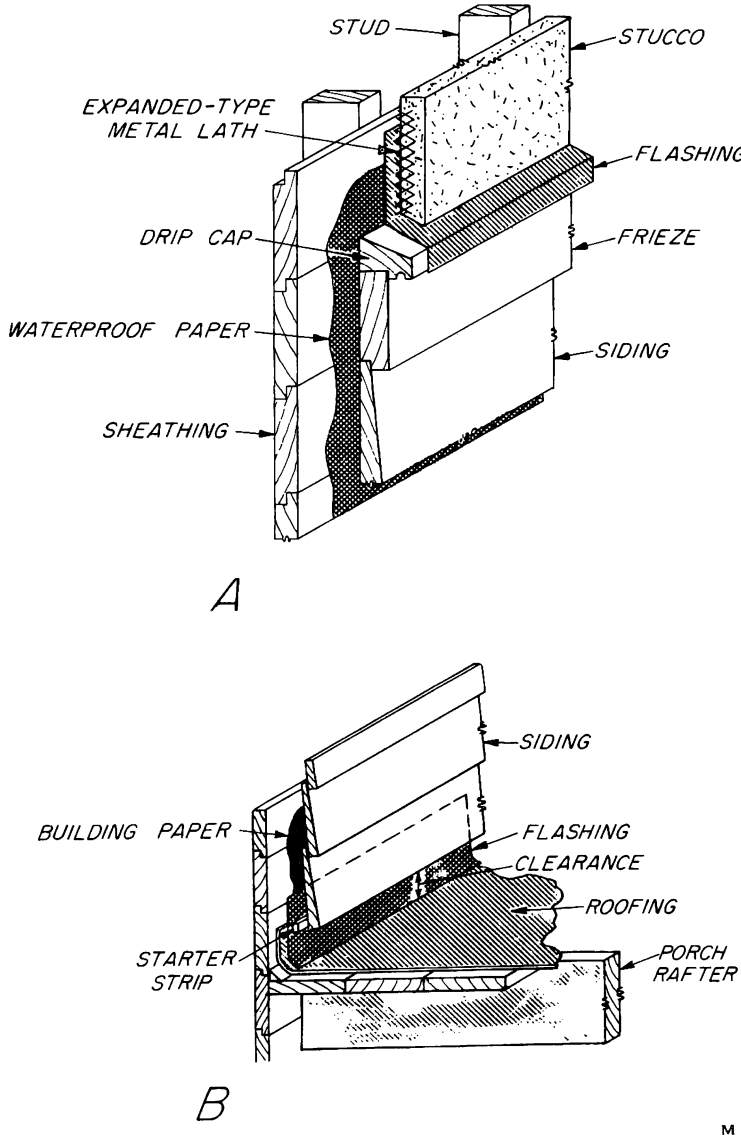

FIGURE 129.—Location of flashing. *A*, at material change; *B*, at roof deck.

Where sheathing paper is omitted, the flashing at the heads of openings should extend under and be turned up behind the sheathing.

Flashing should also be used at the junction of roof decks with the house wall (fig. 129, *B*). The deck roofing is carried up the wall of the house over the sheathing. If built-up or roll roofing is used, a cant strip should be provided to support the roofing at the bend to prevent puncturing. Flashing is then installed over the sheathing, as shown. When the siding is placed on the wall, a clearance of 1½ to 2 inches should be allowed at the butt edge so that no water pockets can form under the siding.

Metal decks are often used for coverage on low-pitched roofs over dormers, porches, or entry hoods. Sheets of metal are formed with raised seams and are fastened to the roof by means of nailing clips (fig. 130, *A*). Standing seams are locked and crimped. Nailed seams should be lapped with the metal edge to cover the nailheads, and both sides of the seam should be soldered. Flashing should be carried under the siding at the juncture with the house.

Ridge flashing is used on houses that have wood shingles and that are finished with a wood-shingle Boston ridge (fig. 130, *B*). The flashing is formed to the ridge angle and nailed in place over the top course of the shingles. The ridge shingles are then placed over the flashing. Metal ridge roll is also used in place of the Boston ridge to protect the ridge.

Stack-vent terminations with the roofline are flashed to prevent moisture entry.

Flashing is used at the intersection of two rooflines that form a valley (fig. 131, *A*). The valley flashing is installed before the roofing is applied. The minimum width of valley flashing is 18 inches for roofs with slopes less than 7 in 12, and 12 inches for slopes greater than 7 in 12. It is good insurance, however, to install the wider valley sections. The best method of fastening valley flashing in place is by means of clips, but nailing is satisfactory when flashing is wide. Nailing of both flashing and shingles should be kept back as far as practical. Mastic may be used under asphalt shingle tabs where they contact the flashing. It is wise to use wide valley flashing where snow and ice dams may cause melting snow water to back under the shingles.

Where the valley separates a large area of roof from a smaller area, the water from the major roof area may be forced under the shingles of the secondary roof during heavy rains. Valley flashing under these conditions should have a standing-center water stop (fig. 131, *B*). The standing center should be 1 inch high and will break the rush of water down the roof. Where asphalt shingles are used, the metal flashing is sometimes replaced with 2 layers of mineral-surfaced roll roofing weighing not less than 85 pounds per square. The bottom strip should be at least 12 inches wide and the top strip at least 18 inches wide.

Shingle flashing or flashing squares are used at intersections of roofs and walls or chimneys. This flashing is installed as the shingles are applied, with one square being used at each course and being bent up along the wall (fig. 131, *A*). Siding will cover the flashing along the wall except for the clearance allowed. These squares should be large enough to give a good lap at the roof-and-wall line. Head lap should be no less than 2 inches.

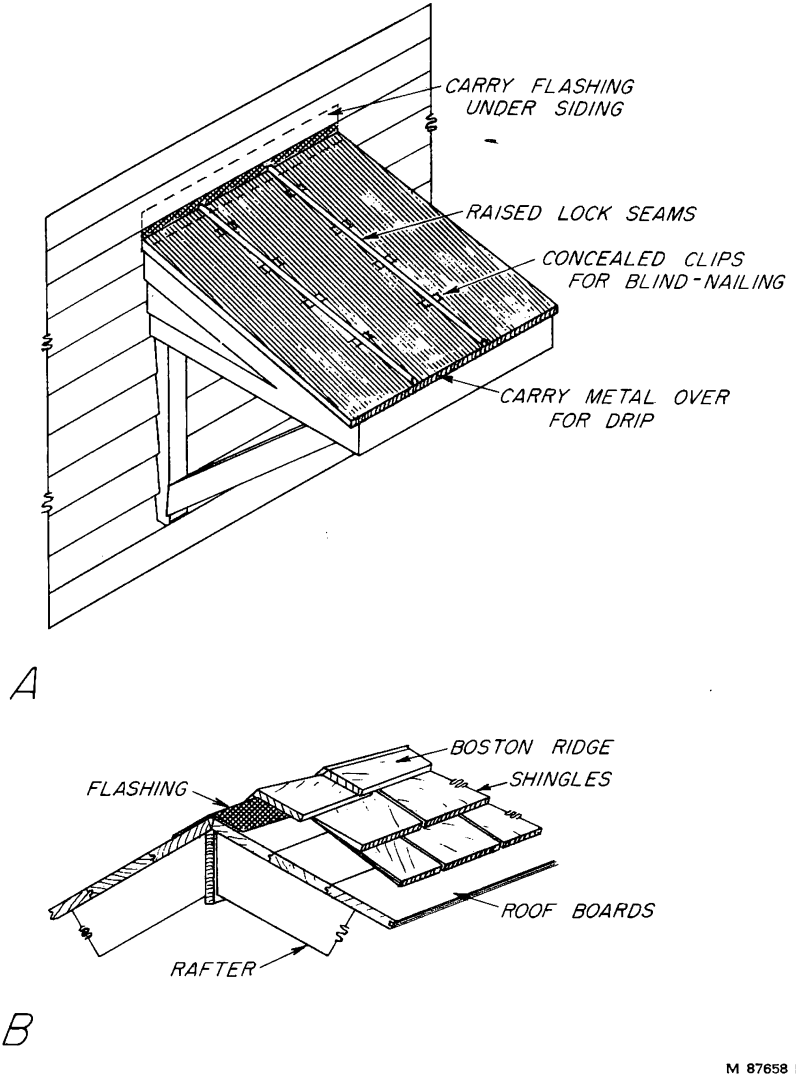

FIGURE 130.—Locations of flashing. *A*, At siding and metal roof; *B*, at ridge.

Counterflashing is used at chimneys over shingle flashing that has been installed during the roofing process. This counterflashing is often made to fit each side of the chimney and has a turned edge that is inserted in the brick joints and is fastened with lead plugs, after which the joints are calked. The counterflashing fits tightly against the chimney and laps over the shingle squares (fig. 131, *C*). This counterflashing also applies to upper and lower slopes of the chimney.

Crickets or saddles are installed on the roof slope immediately above the chimney (fig. 131, *C*). They are often made of sheet metal and should be placed over a wood framing support constructed during

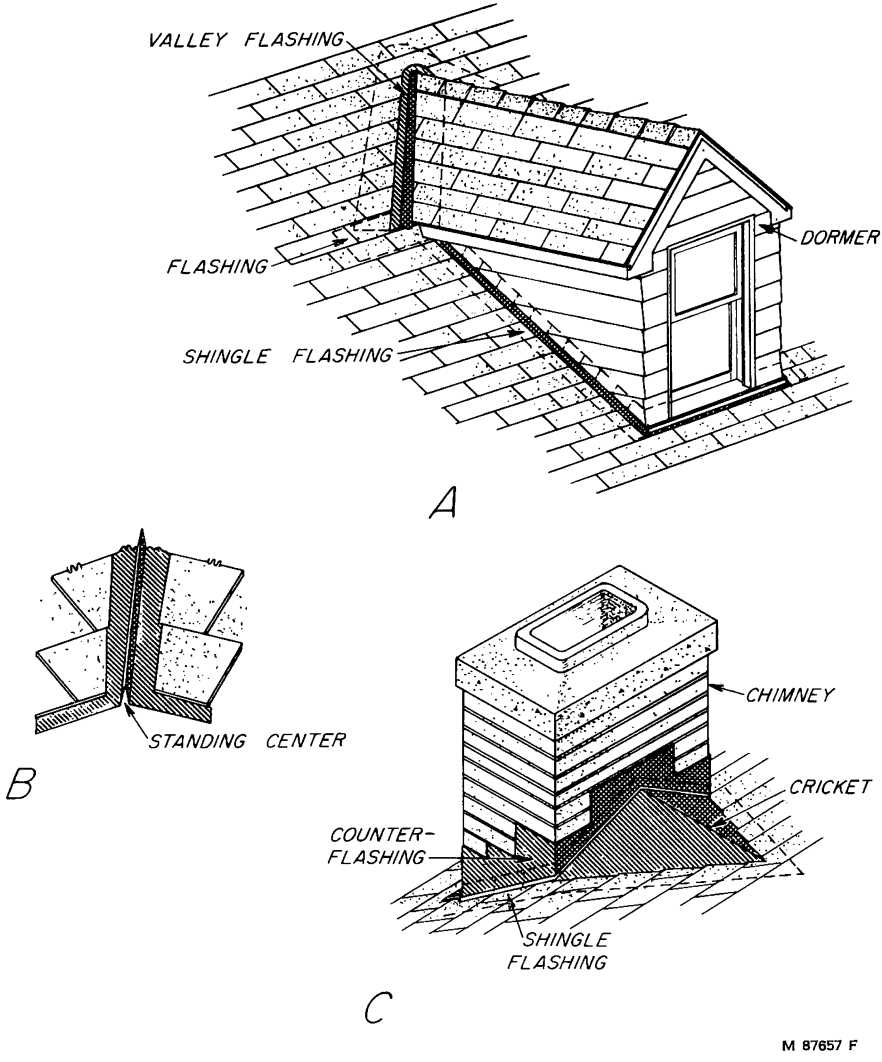

FIGURE 131.—Flashing at center of rooflines. *A*, Valley and shingle flashing; *B*, standing-center valley flashing; *C*, chimney and shingle flashing.

roof-framing operations. Connections with the chimney should be lead-plugged and calked. Open joints and laps should be soldered or sealed by other satisfactory means, or a locked joint should be used.

Gutters and Downspouts

Various types of gutters are on the market. The two general types are the formed-metal (fig. 132, *A*) and the half-round (fig. 132, *B*). Downspouts or leaders are rectangular or round, with the round leader being ordinarily used with the half-round gutter. Round leaders

(fig. 132, *C*) are usually corrugated for added strength, as are the rectangular leaders (fig. 132, *D*). The corrugated patterns are also less likely to burst when plugged with ice.

Wood gutters are often used in place of metal gutters and are usually fastened by means of rust-resistant screws or nails (fig. 132, *E*), Nailing or spacing blocks are placed between the gutter and the facia or frieze board about 16 inches on center. Wood gutters are given very little pitch because they usually are part of the architectural treatment. Joints in wood gutters are best made by dowels or splines, and the joints are covered with heavy fabric tacked in place and covered with a mastic.

Some authorities advise painting the inside of the trough or coating it with pitch while others advise against such coatings. The advantage of the coatings are debatable and, because of the exposure to wetting, drying, and sun, such coatings would be short lived. In any case, it would be good practice to apply 1 or 2 coats of a commercial type of water repellent containing a preservative to the bare wood.

Hanging gutters (fig. 132, *F*) are held with flat or wire metal hangers that are so installed that a pitch is formed for drainage. Joints in metal gutters and downspouts should be soldered. Gutters should be

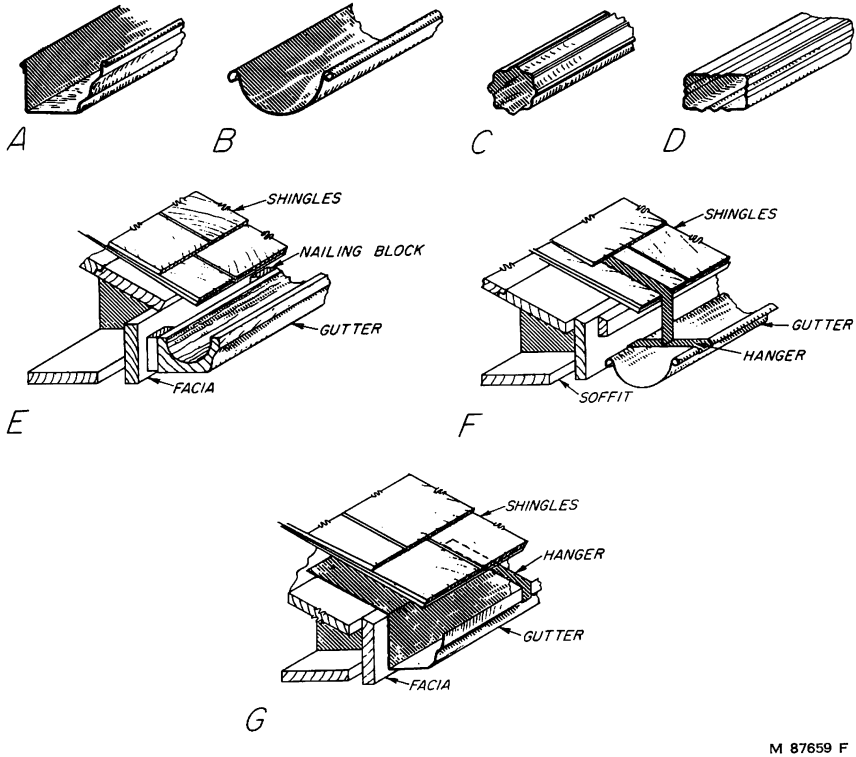

FIGURE 132.—Gutters and downspouts. *A*, Formed, and *B*, half-round gutter; *C*, round, corrugated, and *D*, rectangular, corrugated downspout; *E*, wood-gutter, *F*, hanging-gutter, and *G*, formed-gutter installation.

mounted so that the shingle extension is over the center of the gutter. Hangers should be spaced 3 to 4 feet on center.

Another type of formed metal gutter has an extension or flashing strip that is fastened to the roof boards (fig. 132, *G*). These gutters are usually made so that the back varies in height to allow a pitch for drainage. Hangers are used at the outer rim to add stiffness.

Metal gutters are placed to drain toward the downspouts; and with a slope of approximately 1 inch in 10 feet, the maximum run between the high point and the downspout should not ordinarily exceed 25 feet. A gooseneck is used to bring the downspout in line with the wall. The form of this gooseneck will vary according to the extent of the cornice overhang.

Downspouts are fastened to the wall by means of leader straps or hooks (fig. 133, *A*). Many patterns of straps are made to allow a space between the wall and the downspout. A minimum of two straps should be used in an 8-foot length of leader; one at the gooseneck and one at the bottom or elbow. The elbow is used to lead the water to a splash block that carries the water away from the foundation. The minimum length of the splash block should be 3 feet. It is the practice, in some areas, to carry the water to a storm sewer by means of tile lines (fig. 133, *B*). In final grading the slope should be such as to insure positive drainage of water away from the foundation walls.

PORCHES AND GARAGES

Porches, garages, and other attachments to the house must be so designed as to be structurally correct and to fit the architectural design of the house.

Porches

Since there are many types and designs of porches, and as it would be impossible to describe them all, only a general discussion of the fundamental construction principles will be covered here.

The open porch, such as shown in figure 134, gives a general idea of how it is attached to the house and other detailed information. This type of porch could also be enclosed with screens for summer and with storm sash for the colder months.

Porch framing and floors.—The structural framing of the porch will be similar to the methods used and described for floor, wall, and roof framing, pages 22, 31, and 40.

Porch floors, whether constructed of wood or concrete, should have sufficient pitch away from the house to provide good drainage. Weep holes or scruppers through screen frames or solid porch rails are also desirable. If wood construction is used, it is desirable to avoid dirt fill or closed-in space under porches, as these invite attack from decay and termites. The bottom of the floor joist should be at least 18 inches above the ground, and ventilation should be provided in the end and side walls. Provision should be made for an access door to permit periodic inspection.

Species used for finish porch floor should have good decay and wear resistance, be nonsplintering, and have freedom from warping. Species commonly used are cypress, Douglas-fir, western larch, southern yellow pine, and redwood. Only heartwood should be used.

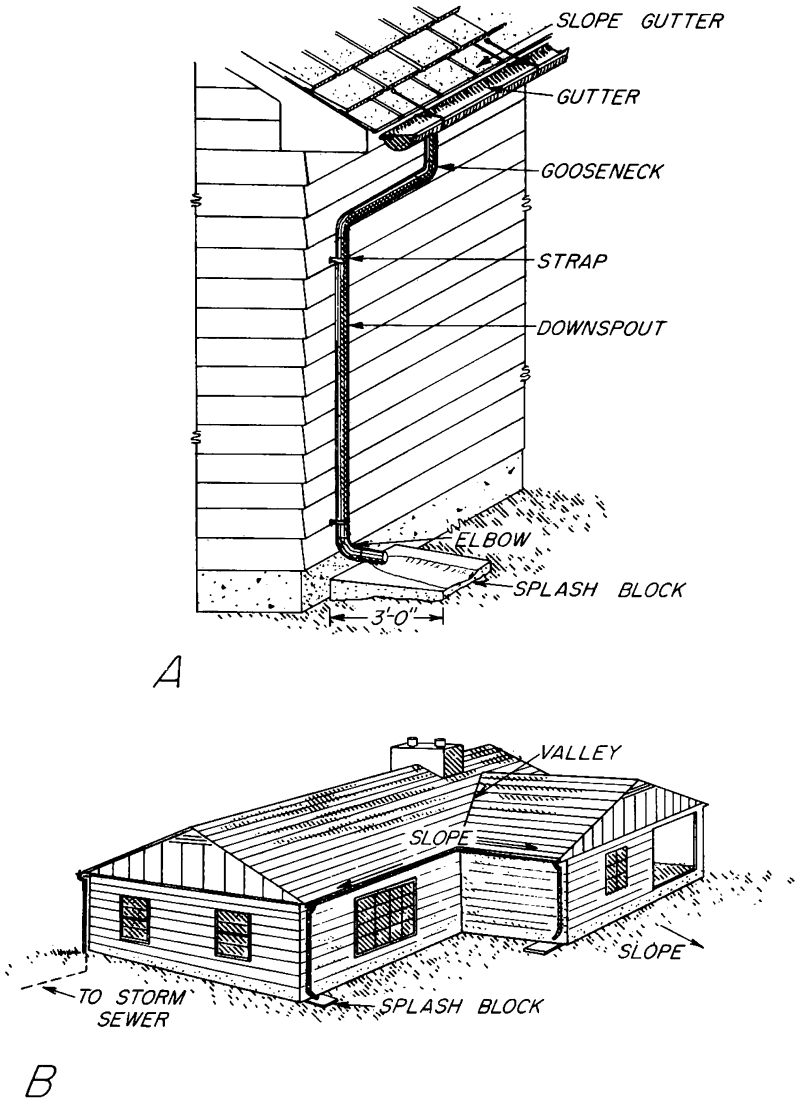

FIGURE 133.—Installation of: *A*, Downspout; and *B*, gutter, showing slope and drainage away from foundation walls by splash block or by storm-sewer connection.

Porch columns.—Some porch columns are built up of structural members (fig. 135, *A*, *B*, *C*, *D*) and are enclosed with exterior trim on the job, while others are hollow and made at the mill of material thick enough to support the load. The base of any type of column should be so constructed that it will support the column and its load. Wood posts and columns should be ventilated at the base and must be so constructed that moisture will not accumulate around the base. Figure 135, *E*, shows a solid-wood column.

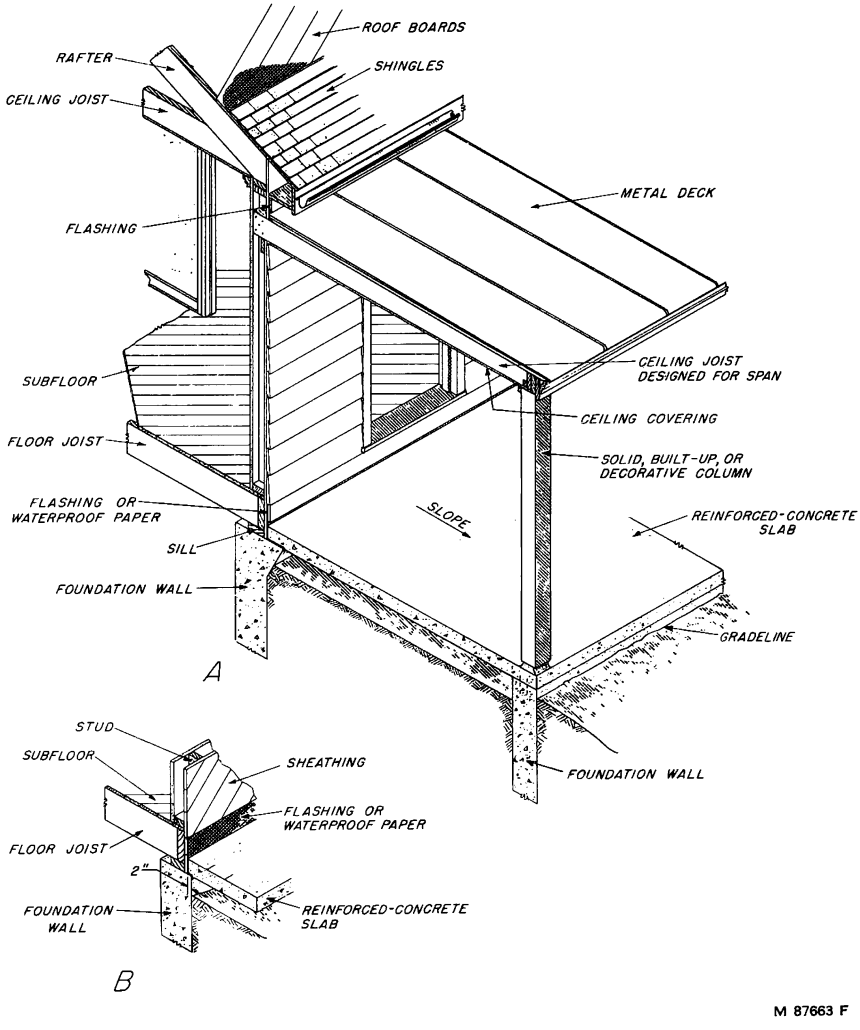

FIGURE 134.—Typical porch construction. *A*, Open porch; *B*, alternate method of slab support.

Balustrades.—The trend in modern design is to eliminate, as far as possible, pockets, ledges, and curved surfaces that are difficult to paint and that might retain moisture and thus create a decay hazard. The solid-panel rail or the open-lattice type (fig. 136, *A*, *B*, *C*) of balustrade is more commonly used than the ornate spindle type.

The function of a balustrade on a porch or deck is to provide protection to the occupants and to improve the appearance of the building. All members that are exposed to water and snow should be tapered on the top to shed water. They should preferably be made of all-heart stock of decay-resistant or specially treated wood and have as few joints as possible.

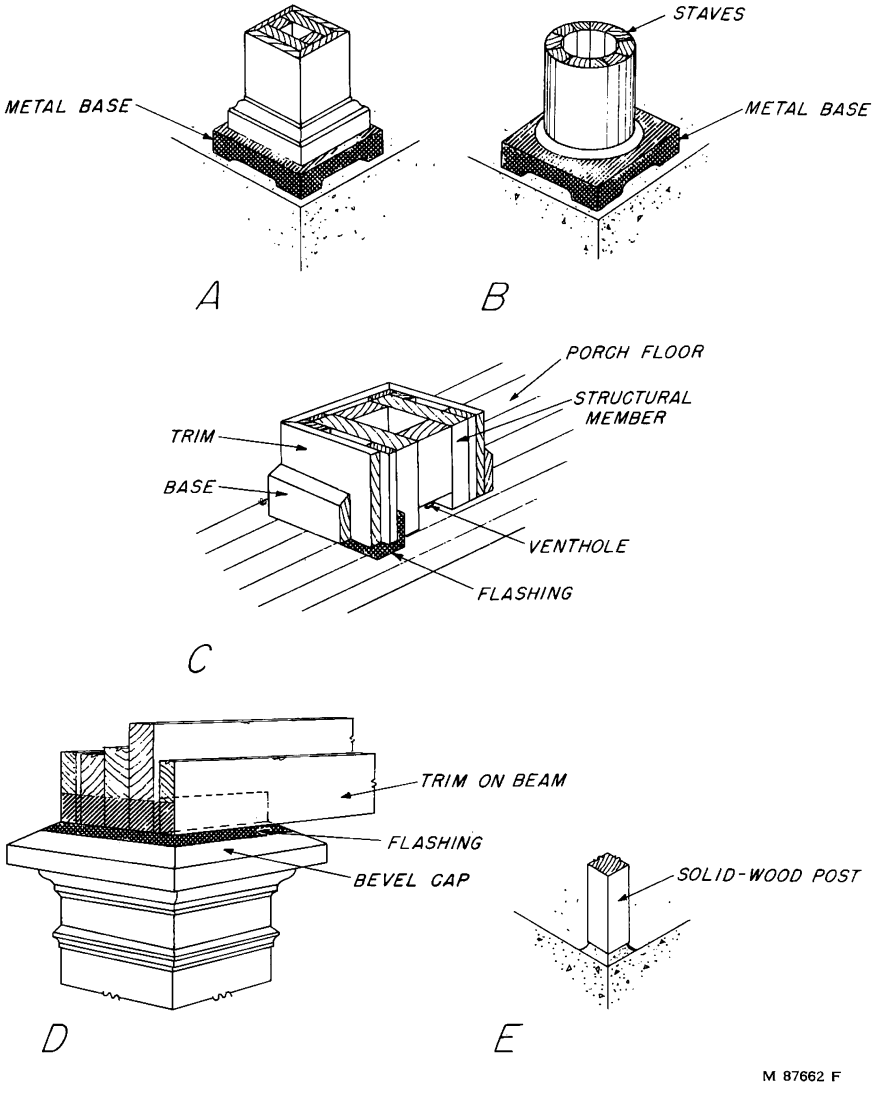

FIGURE 135.—Porch columns. *A*, Box; *B*, round; *C*, base of built-up column; *D*, cap of built-up column; *E*, solid column.

Garages

Garages can be classified as attached, detached, basement, or carport. The selection of a garage type is often determined by limitations of the site and the size of the lot. Where space is not a limitation, the attached garage has many points in its favor. It may be used to give better architectural lines to the house, it is warmer during cold weather, and it provides covered protection to passengers, convenient space for storage, and a short, direct entrance to the house.

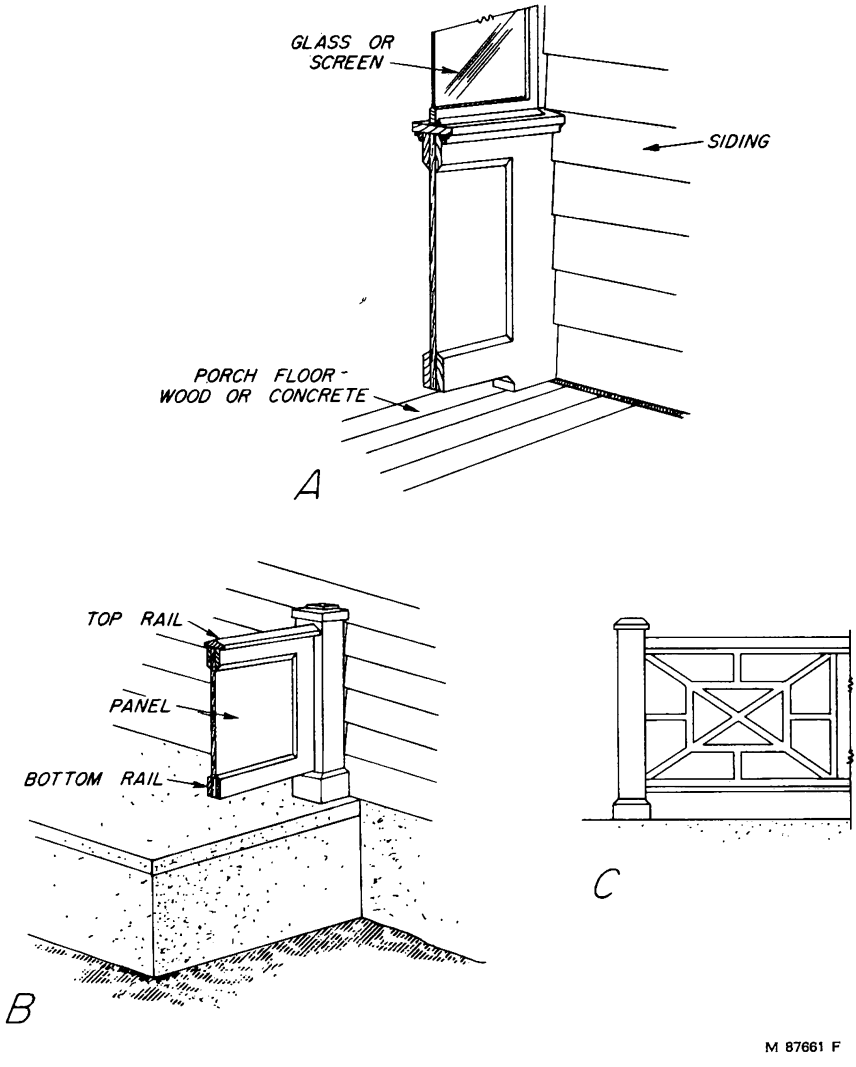

FIGURE 136.—Porch balustrades. *A*, Solid-panel type for glassed-in or screened porch, and *B*, for open porch; *C*, open-lattice type.

Detached garages are usually located in the rear of the lot and often have alley entrances. Where there is considerable slope to a lot, basement garages may be desirable, and generally such garages will cost less than garages above grade. Carports are car-storage spaces, generally attached to the house, that have roofs but no side walls.

Size.—It is a mistake to make the garage too small for convenient use. Cars vary somewhat in size, but the garage should be long enough to take almost any model and to have space to pass around both ends of the car. This provision will require a minimum of 20 feet between the inside face of front and rear walls. If a work bench or storage

space is to be provided at the rear wall, the length of the garage should be increased accordingly. The width should be such that doors on either side of the car can be opened freely. A width of 10 feet of clear space is almost a minimum; one of 11 feet or more is better. Since the garage space is highly valuable for storage of garden tools, bicycles, screens, storm sash, and other articles, additional space requirements may be provided for such purposes.

Construction.—For an attached garage, the foundation wall should extend below the frostline and about 6 inches above the finish-floor level. It should be not less than 6 inches thick. The sill plate should be anchored to the foundation wall with anchor bolts spaced about 8 feet apart, with at least 2 bolts in each sill piece. Extra anchors may be required at the sides of the main door. The framing of the side walls and roof and the application of the exterior covering material of an attached garage should be similar to that of the house.

The interior finish is largely a matter of choice. The studs may be left exposed or covered with matched lumber or they may be plastered. Some building codes require that the wall between the house and the attached garage be made of fire-resistant material and that the service door from the garage to the house be tin clad.

If fill is required below the floor, it should preferably be sand or gravel well compacted and tamped. If other types of soil fill are used, the fill should be wet down so that it will be well compacted and can then be well tamped. The floor should be of concrete not less than 4 inches thick and laid with a pitch of about 2 inches from the back to the front of the garage. The garage floor should be set about 1 inch above the drive or apron level. It is desirable at this point to have an expansion joint between the garage floor and the driveway or apron.

Garage doors.—There are many types of doors for garages, each having its advantages and disadvantages. The three most commonly used doors are the hinged, the swing-up, and the sectional overhead doors. Occasionally, folding sliding doors are used. The hinged door is the least expensive and the easiest to install (fig. 137, *A*). These doors open outward and are held in position with door holders. When the door is standing open, it has no protection from the rain and snow, so that the alternate wetting and drying may cause warping. Further, when these doors are left open, the wind may whip the door around so as to cause a racking action and possible breakage. During the winter, hinged doors are difficult to open when snow and ice have accumulated on the driveway.

The overhead doors are made in two types, one as a single-section door (fig. 137, *B*), and the other in sections hinged together (fig. 137, *C*). The swing-up door with the single section operates on a pivot principle with the track mounted on the ceiling and the rollers located at the center and top of the door. A pair of counterbalance springs is mounted on the door to make operation easy. The sectional overhead door has rollers at each section fitted into a track at the side of the door and the ceiling. These doors are well protected from rain and wind, and snow and ice offer no particular problem. They are somewhat more difficult to install and more expensive than the hinged doors. The sectional door requires more headroom above the opening than the single-section door.

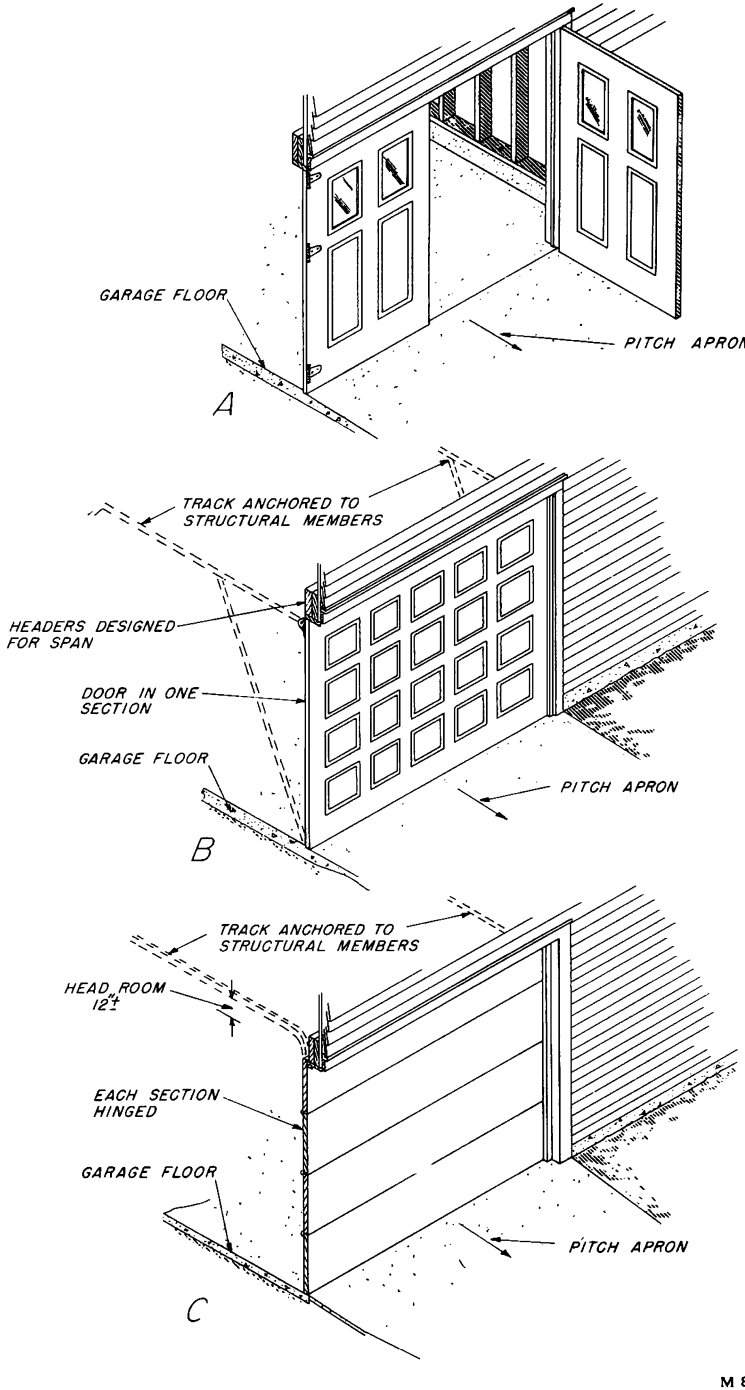

FIGURE 137.—Types of garage doors. *A*, hinged; *B*, overhead swing; *C*, overhead sectional.

Sliding folding doors are hung from a track above the door. If the track is hung on the outside, they are subject to the harmful action of rain, snow, and wind. If the track is hung on the inside, the doors can fold against one another in several thicknesses or the track can be curved along the inside wall. The various types of doors and hardware, with complete instructions for their installation, can be obtained from local lumber dealers.

CHIMNEYS AND FIREPLACES

Chimneys are generally constructed of masonry supported on a suitable foundation. A chimney must be capable of producing sufficient draft for the fire, and of carrying away harmful gases from the fuel-burning equipment and from other utilities. Lightweight prefabricated chimneys that require no masonry protection and no concrete foundation are now accepted for certain uses by fire underwriters and are available for use.

A fireplace is a luxury except in mild climates or in locations where other heating systems are not available. Since an ordinary fireplace has an efficiency of only about 10 percent, its value as a heating unit is low compared to its decorative value and to the cheerful and homelike atmosphere it creates. The heating efficiency of a fireplace can be materially increased by the use of a factory-made metal unit that is incorporated in the fireplace structure and that allows air to be heated and circulated in a system separate from the direct heat of the fire. The chimney and the fireplace must be carefully built in order to be free of fire hazards, and it is desirable to have them in harmony with the architectural style of the house.

Chimneys

Masonry.—The chimney should be built upon a solid masonry foundation properly proportioned to carry the loads imposed without settlement or cracking. The footing for an exterior chimney should start below the frostline.

The minimum size of a chimney will depend upon the number, arrangement, and size of flues (*28*). The flue from a heater should be of sufficient cross-sectional area and height to create a good draft and to develop the rated output of the equipment in accordance with the manufacturer's recommendations. The chimney should be so located with reference to any higher buildings nearby that wind currents will not form eddies and force the air downward. When downdrafts from surrounding trees or buildings hit the top of the chimney and prevent proper draft, a hood or cover may be helpful in deflecting these currents. The total area of the side openings where a cover is used should be at least four times the area of the chimney flue (*39*).

Most building codes require that the tops of chimneys be carried high enough to avoid downdrafts caused by turbulence of wind as it sweeps around nearby obstructions or over sloping roofs. In no case should the height be less than 2 feet about the ridge of the roof at the chimney site and not less than 2 feet above the highest ridge

within 10 feet of the chimney. The height above a flat roof should be not less than 3 feet—more if called for by manufacturer's requirements (fig. 138).

In some instances it is necessary to offset or corbel a chimney to obtain an architectural effect. The total offset, corbel, or overhang of

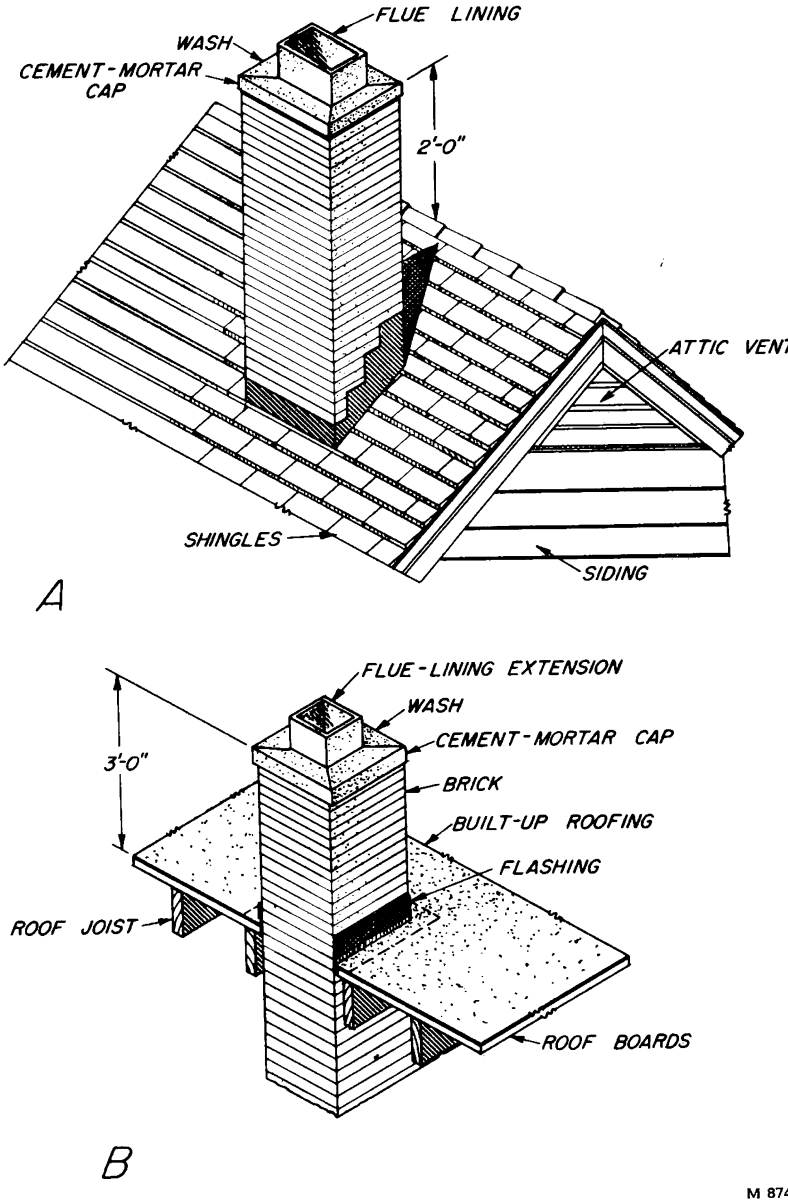

FIGURE 138.—Chimney heights. *A*, Above gable roof; *B*, above flat roof.

an independent chimney should not exceed three-eighths the width of the chimney in the direction of the offset (fig. 139).

Prefabricated type.—Many new types of lightweight chimneys that require no masonry protection nor concrete footing are available for use. If a heating system is such that this type of chimney can be used, the following precautions should be observed.

a. Make sure the model has been tested and listed by the Underwriters' Laboratories, Inc.

b. The installation must be made in strict accordance with the manfacturer's instructions.

3. The unit must conform to the local building code.

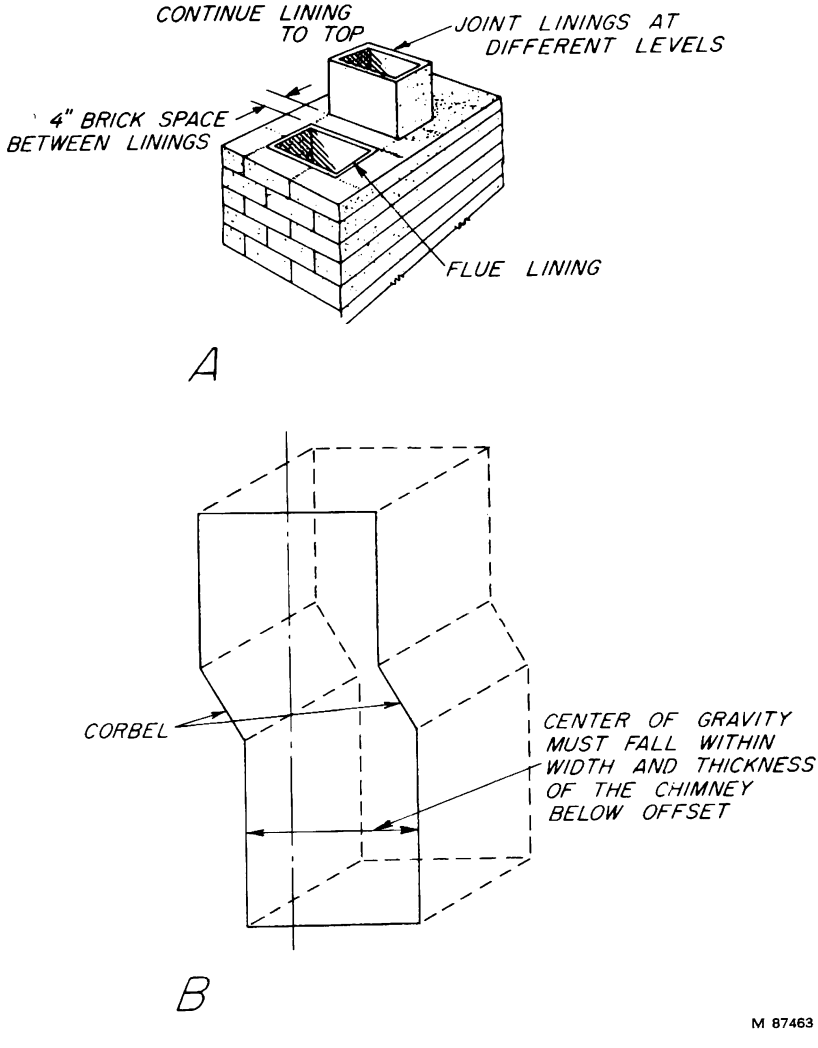

FIGURE 139.—Chimney and corbel details. *A*, Installation of flue linings; *B*, offset or corbel.

304696 O—55——12

Fireplaces

A fireplace that draws properly can be assured by applying proper principles of design. The size of flue should be adequate and should be based upon the size of the fireplace opening. One rule commonly used is to take one-tenth of the area of the fireplace opening to find the minimum area of the flue. For example, if a fireplace had an opening 3 feet wide by 2 feet 6 inches high, it would have an area of 1,080 square inches. One-tenth of 1,080 square inches equals 108 square inches. The standard-size flue nearest to this requirement and readily available is a 13- by 13-inch flue lining, which has an inside cross-sectional area of 126.56 square inches. One could also use a 13-inch round flue that has a cross-sectional area of 113.0 square inches.

The front of the fireplace should be wider than the back and the upper part of the back should tilt forward to meet the throat (fig. 140, *A*, *B*) in order to throw heat into the room instead of up the chimney. The arch over the top of the fireplace opening should be only 4 inches thick, and the throat should project towards the front as much as possible to form the smoke shelf behind it. The area of the throat should be 1¼ times the area of the flue, with minimum and maximum width of 3 and 4½ inches, respectively, so that the narrow throat will cause a quick suction into the flue. The sides of the fireplace above the throat are drawn together to form the flue, which always starts exactly over the center of the width of the fireplace. The smoke shelf is very necessary to stop back drafts. The depth of the fireplace should be one-half the height of the opening, with a maximum of 24 inches. The back should rise one-half the height of the opening before sloping forward and should be two-thirds the opening in width.

The back, sides, and parts of the hearth that are under the fire must be built of heat-resistant materials. Firebrick laid in fire clay is the best combination (fig. 141) (*39*).

The damper is a large valve that can be adjusted to regulate the draft. Many types of commercial damper units are manufactured. The position of a damper unit is important. The damper is generally set about 8 inches above the top of the fireplace opening and is concealed by the brickwork. One advantage of these units is that they they are correctly designed and have correctly proportioned throat damper and chamber to provide a form for the masonry and to reduce the risk of failure in the function of the completed fireplace.

The hearth consists of two parts, the front or finish hearth and the back hearth under the fire. The front hearth is simply a precaution against flying sparks and, while it must be noncombustible, it need not resist intense prolonged heat. Because the back hearth must withstand intense heat, it is built of heat-resistant materials. In buildings with wood floors, the hearth in front of the fireplace should be supported on masonry. The front hearth should project at least 16 inches from the front of the fireplace.

At the back part of the hearth it is customary to have an ash dump for dropping the ashes into the ash pit, which is generally located in the basement with a door for cleaning out ashes (fig. 141).

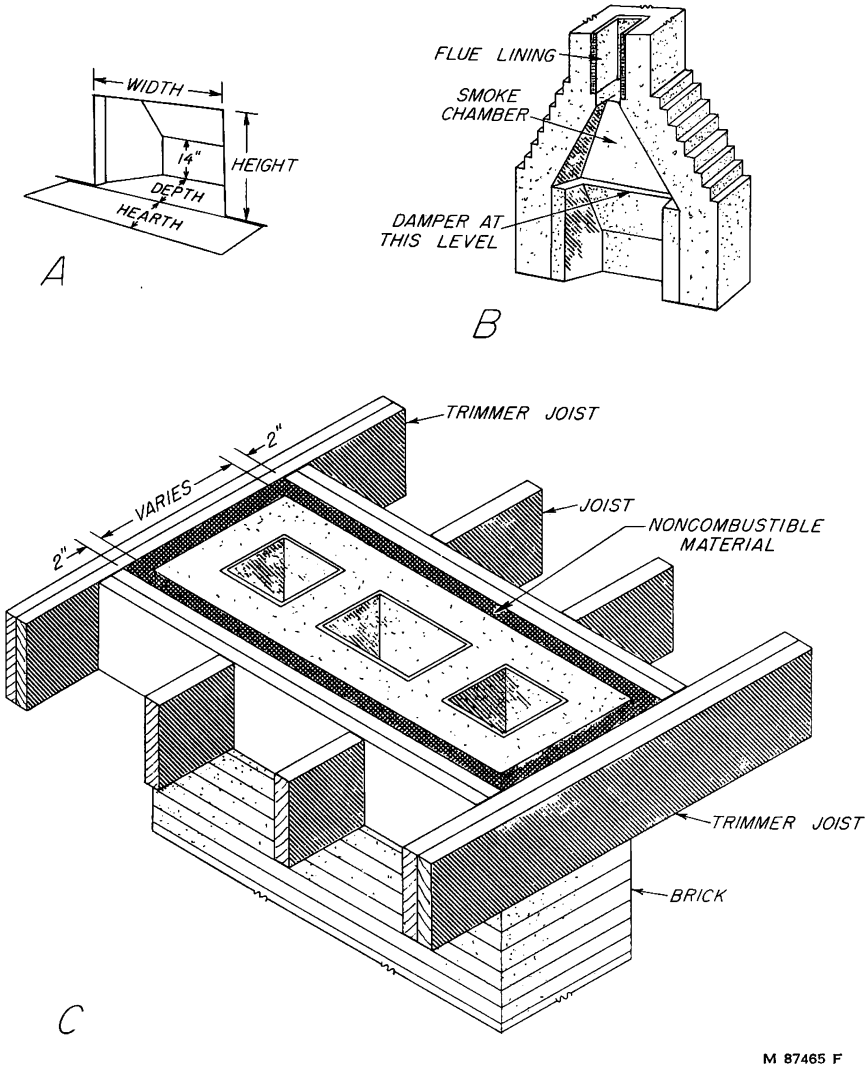

FIGURE 140.—Fireplace and chimney details. *A*, Dimensional outline; *B*, fireplace and opening into flue; *C*, framing around chimney.

Flue Lining

The flue (*28*) is a vertical open shaft through which smoke and gases are carried from the fire to open air. While chimneys are sometimes built without flue lining, those with linings are more efficient. When the flue is not lined, the mortar and brick directly exposed to the action of fuel gases may disintegrate. This disintegration and that occurring from changes in temperature frequently cause cracks in the masonry, which reduce the draft and create a fire hazard. Most building codes, however, require flue lining. The choice of flue lining will depend

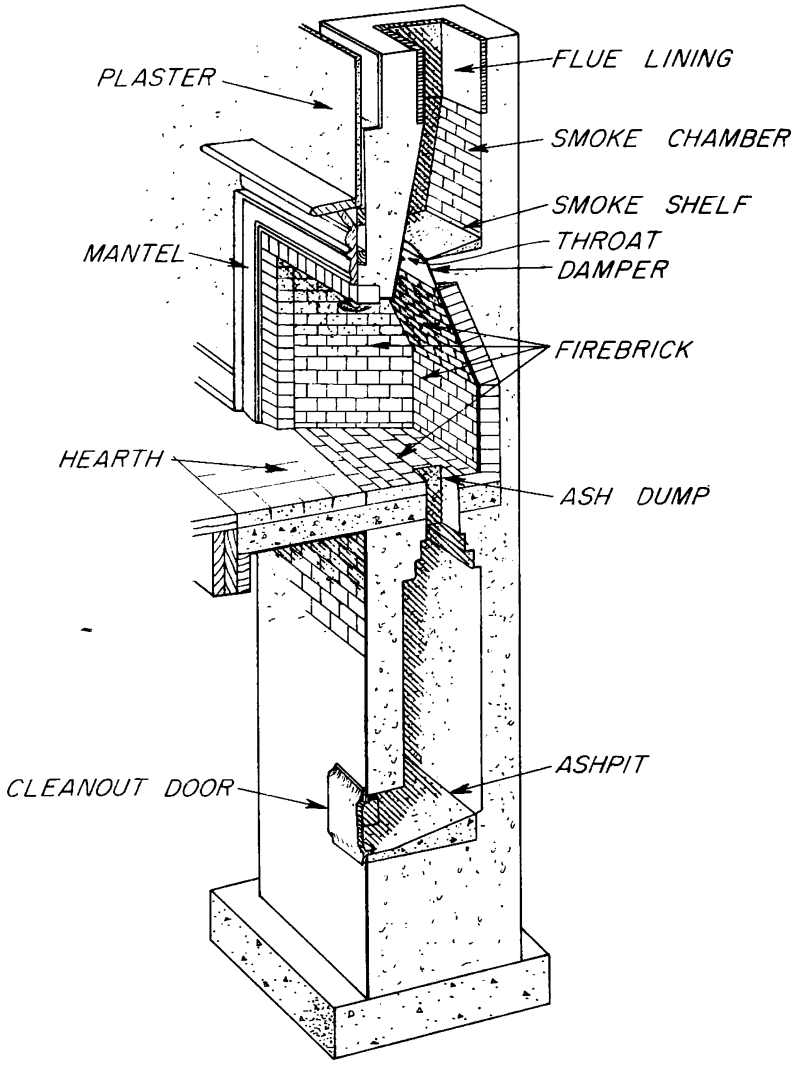

FIGURE 141.—Chimney and fireplace construction.

upon the type of fuel to be used. The flue lining for gas should be glazed, while for coal and oil rectangular clay flue lining is satisfactory. Where glazed flue lining is required, round glazed-clay sewer tile may be used. If there is a likelihood that a change of fuel will be made, it is advisable to select the glazed flue lining that is adaptable to all fuels.

Flue lining is sold in 2-foot lengths for the rectangular type, with outside dimensions ranging from 4½ by 8½ to 24 by 24 inches. Round flue lining is sold in 2- and 2½-foot lengths and will vary from 7¼ to 41 inches in outside diameter. Care should be taken to set flue linings close and flush on top of each other, and if more than one flue is used

the joints should be staggered. The lining is generally carried from 4 to 6 inches above the top of the chimney. In some cases decorative chimney pots are used for extension. As a rule, a single flue should not be used for more than one heating appliance if maximum draft is to be attained. In most cases, however, a gas hot-water-heater vent can be attached to a furnace flue without materially affecting the draft.

The tops of all chimneys must be capped. This cap must provide a good and efficient wash and must be so made as to keep the water out of the masonry joints, otherwise the mortar in the joints may disintegrate. Frequently, a cap will be made of stone for architectural effect, but generally these caps are made of cement mortar, pitched to all sides to shed water quickly.

At the bottom of all flues, except those for fireplaces, there should be a metal cleanout door so that soot can easily be removed from the chimney.

Wood Framing

The roof and all the floors and walls (fig. 140, *C*) should be framed around the chimney so that no combustible material is within 2 inches of the masonry. This space between the framing and the masonry should be filled with fireproof insulating material (*28*).

DRIVES, WALKS, AND BASEMENT FLOORS

The exterior of a house is not complete until the lot is suitably landscaped. If a successful landscape plan is to be assured, it is necessary to make a thorough analysis of the needs for walks and driveways. The material with which walks, drives, and paths are built should be in character with the part of the yard in which it is to be used. Concrete or asphalt are satisfactory for public areas that receive most use and wear; brick, stone, or gravel may be used for the private area in accordance with the personal wishes of the family. Basement floors are usually poured after the sewer and waterlines have been connected and the drain located.

Driveways

In planning a safe driveway there are two main points to consider (*3*). First of all, it should not slope too steeply to the road. Grade the driveway so that it is as level as possible. Under some conditions it is desirable, as a safety factor, to provide enough room at the end of the drive or at some other point so that a car can be turned around. Backing down a drive into a busy thoroughfare can be very hazardous.

There are two types of concrete drives that can be used. One is the ribbon type, made of two concrete ribbons 2 feet wide with a space between them of 2 feet 10 inches (fig. 142, *A*). Curbs can be used with this type of driveway. The ribbon type of driveway is more economical than the full-width pavement, but it is more or less limited to straight runs and is not suitable for use on curves. The slab-type driveway (fig. 142, *B*) is more expensive than the ribbon-type, but it is somewhat easier to drive over and a virtual necessity where curves or turnout areas are required.

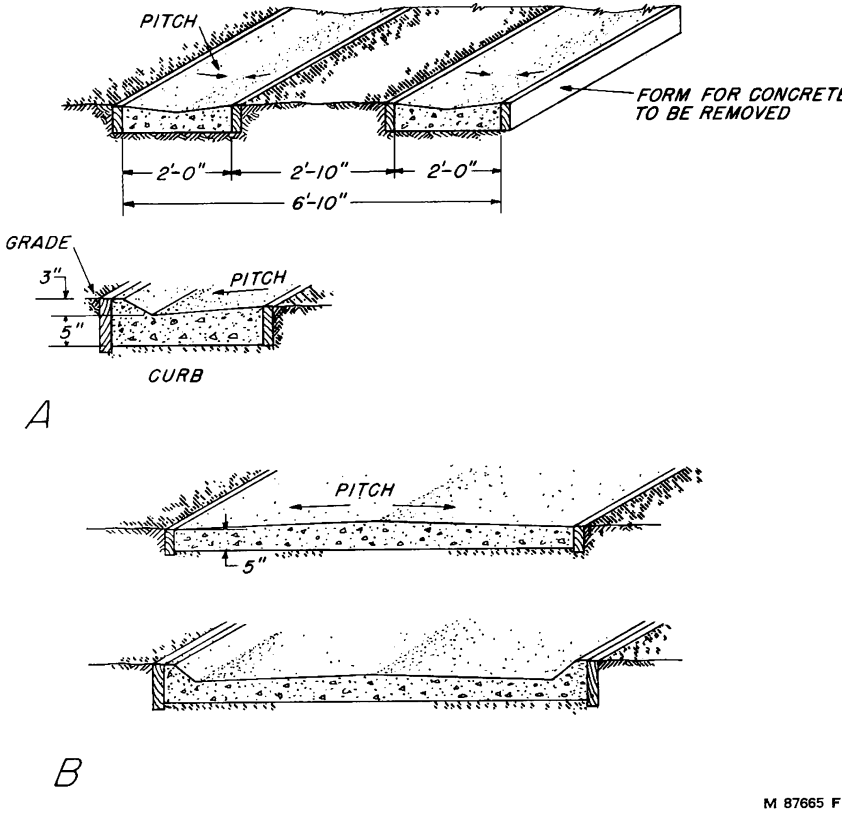

FIGURE 142.—Types of driveways. *A*, Ribbon; *B*, slab.

Construction.—In the construction of driveways (*3*) the area upon which the slab is to lay should be graded to a uniform smooth surface and be well compacted before concreting. All soft and yielding material and loose rocks or boulders must be removed to a depth several inches below subgrade, and the holes must be refilled with tamped material. Any settlement of the subgrade is likely to cause cracking. Construction on ground that has recently been filled 18 inches or more should be postponed for at least 12 months. If the soil is gravelly and porous, no subbase is required. However, if the soil is of a clay type, a 6-inch course of gravel, crushed stone, or cinders should be laid down before pouring of concrete to provide drainage. This subsoil drainage will also help to eliminate heaving of concrete due to frost. Concrete forms of 2- by 6-inch or 2- by 8-inch lumber can be used. The forms should be removed after the concrete has set.

On long drives a 1-inch expansion joint should be placed every 20 to 30 feet, as well as at points where the driveway butts against another permanent structure such as a sidewalk, a curb, or a garage floor. A joint of tarred felt or other prepared joint material should be used.

The thickness of concrete slabs to be used for driveways will depend on the use of the drive; however, a minimum of 4 inches is recommended for general use. If the driveway is to accommodate trucks, its thickness should be increased.

If the driveway is to be made of Portland-cement concrete, the concrete should be mixed in accordance with the recommendation of the producer or dealer. Other types of materials are available for or adaptable to driveways, their use depending on custom or availability in different parts of the country. In making a selection, it is desirable to consider the maintenance required. The following materials have been used for driveways.

a. Cinders, crushed slag, gravel, and crushed stone. These materials are those used in low-cost secondary-road construction. Construction of a drive with any of these materials should involve practically no equipment cost; the expense of preparing the subgrade, the cost of delivered materials, and the cost of spreading the materials should make up all of the expense items involved.

b. Rock asphalt; bituminous mixes; asphaltic concrete; bituminous materials with a cover of stone chips, crushed gravel, or slag; and cement-bound macadam. These materials are sometimes used in driveway construction, but they require special equipment and should be placed by a person experienced in their installation.

Sidewalks

Plain concrete sidewalk slabs (fig. 143) must have a smooth subgrade to provide uniform bearing. If the slab is to be laid directly on the ground, all soft spots must be dug out and filled with solid material, which must then be well compacted. Over dry, well-drained soils, the fill may be safely omitted.

Construction joints (fig. 143, sec. *A–A*) are made by placing metal division plates between the side forms and then removing them after the concrete has taken its initial set; or by cutting partially hardened concrete completely through to the subgrade with a steel trowel. These joints minimize irregular cracks in the material from the shrinkage of concrete in curing and the expansion and contraction that occurs in hot and cold weather. Movements too great for the construction joints are accommodated by expansion joints (fig. 143, sec. *B–B*).

Walks can also be made of gravel, brick, flagstone, or other types of stone. Brick and stone are often placed directly over a sand or earth base, but this type of construction is not completely satisfactory in a climate where there is frost. A brick or stone walk is much more durable on a concrete base. A bed of cinders or sand is desirable to get good drainage. The concrete base should be poured over this bed, and when this base is set, a setting bed of mortar is applied with a slight crown so that water will drain off the finish walk. The bricks or stone are then set into the base. The joints between the brick or stone can be packed with cement mortar, or they can be left open or filled with sand.

Basement Floors

Basement floor slabs should be no less than 3 inches thick and should be sloped toward the floor drains. At least 1 floor drain should be used, and for large floor areas, 2 are more satisfactory. One should be located near the laundry area.

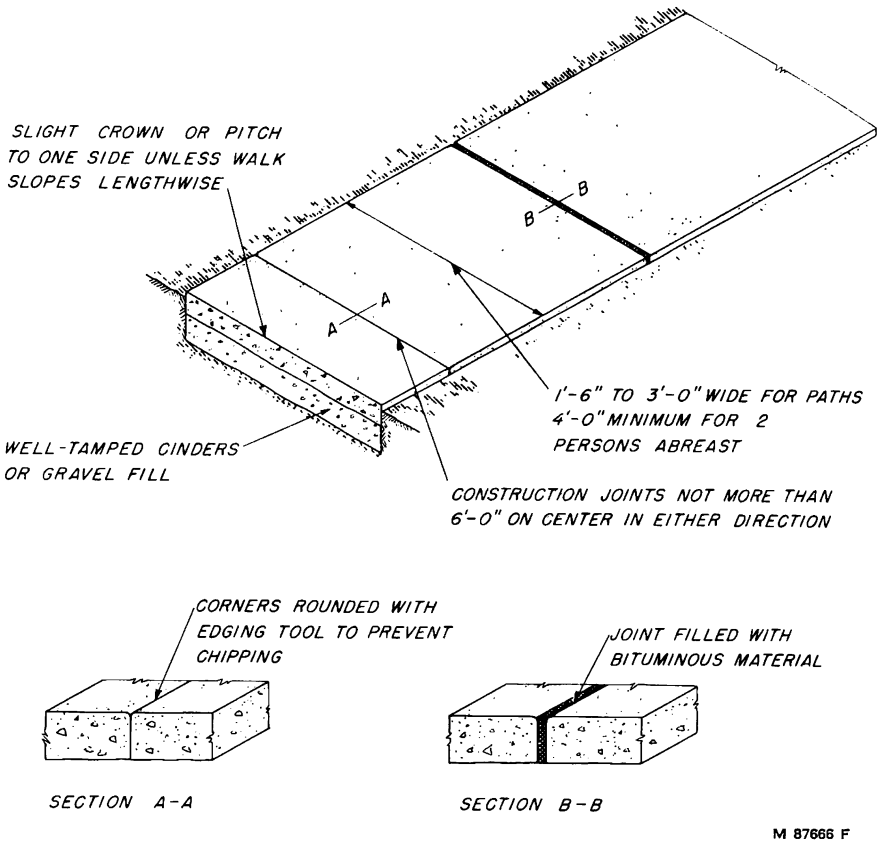

FIGURE 143.—Construction of concrete walk. Section *A–A* shows construction joint; section *B–B* expansion joint.

Where soil has poor drainage and a dry basement floor is desired, a vapor barrier of light roll roofing should be used over a bed of sand or gravel. This bed should be at least 4 inches thick and should be well tamped. The barrier will prevent moisture from entering the slab and will help to prevent floor paint from peeling should the owner desire this finish.

PAINTING AND FINISHING

Decoration is usually the primary purpose of painting or finishing wood. By suitable choice of coating material the grain pattern of the wood can be fully revealed, partly obscured, or completely hidden. The color and brightness can be left unchanged or can be varied from white through a complete range of colors to black. The sheen can be controlled from flat or glossless to a high degree of gloss. The texture can be altered from the roughness of sawed or of surfaced lumber to the mirrorlike smoothness of a full enamel or rubbed varnish finish, or to the coarse texture of sand finish, stipple finish, or tooled finishes (*57*).

Protection is a secondary purpose of some painting or finishing of wood (*53*). Exterior wood needs protective coating to prevent weathering when there is objection to the soiling, color change, roughening of surface, cupping or warping, tendency to loosen fastenings, and slow erosion of wood substance that otherwise results (*55*). But when such developments are unobjectionable, exterior wood may be decorated with poorly protective finishes or may even be left uncoated. Interior wood may need moderately protective coating to make it easy to keep clean and smooth of surface. Wood subjected in service to alternations in dampness and dryness may need highly protective coating on concealed as well as on visible surfaces to minimize changes in dimensions and distortion of shape. Decorative and protective properties obtainable by choice among widely available coatings and finishes are summarized in table 3.

CHARACTERISTICS OF WOODS FOR PAINTING

All of the commercially important woods can be kept well painted or otherwise finished provided that paints of good quality, including suitable primers, are carefully selected, properly applied, and wisely maintained according to a reasonable program of repaintings. Some woods allow a wide freedom of choice of paints and painting procedures, whereas others are more exacting in their requirements if fully satisfactory experience is to be obtained. Woods differ also in the appearance of natural finish obtainable with them and in the ways in which they behave if exposed to the weather without protective coating or treatment. Table 4 presents a classification of woods for some of the characteristics that affect painting, natural finishes, or exposure to the weather without protection.

Woods that offer the greatest freedom of choice for painting are the woods that are low in density, slowly grown, cut to expose edge grain rather than flat grain on the principal surface, are either free from pores (softwoods) or have pores smaller than those in birch (hardwoods), and are free from defects such as knots, pitch pockets, excessive pitch, and wane (*7*). Flat-grain boards hold paint better on the bark side than on the pith side. All of the pines, the spruces, and Douglas-fir are improved for painting by kiln-drying adequately to fix the resin in the wood so that it becomes unlikely to exude through the coating (*13*). Eastern redcedar and Spanish cedar contain slowly volatile oils that prevent proper drying of most paints and varnishes unless most of the oils are removed by exceptionally thorough kiln-drying. Incense-cedar, Port-Orford-cedar, and cypress may sometimes give similar troubles if they contain too much of their characteristic oils. For other woods the method of seasoning has little or no effect on paintability. Water-soluble extractives in redwood, western redcedar, walnut, chestnut, and oak may retard drying of coatings applied while the wood is damp or wet and may discolor paint if the wood becomes thoroughly wet after painting (*12*), but otherwise such extractives contribute to better durability of paint.

On exterior surfaces softwoods that expose wide bands of summerwood require extra care in painting (see p. 189) because it is over such bands of summerwood that the paint coating, when embrittled by the

TABLE 3.—*How decorative effects such as opacity, color, gloss, and texture are obtainable by application of commonly used coatings and finishes and the relative extent to which protection against weathering and rapid moisture change is provided*

Kind of coating (when applied in the customary number of coats and coating thickness)	Representative thickness of coating [1]	Decorative effects obtainable				Relative protective power
		Concealment of the wood	Color (RC, range of color)	Degree of gloss	Texture of surface [2]	
	Inch					
Penetrating finishes:						
Water-repellent		None	Color of wood [3]	None	That of wood	Low.
Wax		do	do [3]	Low	do	Very low.
Wax over wood sealer		do	do [4]	Low to medium	do	Low.
Linseed oil		do	do [4]	do	do	Do.
Wood sealer		do	do [4]	do	do	Do.
Stain, unpigmented		do	RC, darker than wood.	None to low	do	None.
Oil stain, low pigments		Slight	RC, light to black	do	do	Low.
Shingle stain	0.0004	Partial	RC, light to dark	Low	do	Do.
Surface coatings:						
Varnish	.0015	None	Color of wood [4]	Low to high	Very smooth	Medium.
Color varnish	.0015	Slight	RC, darker than wood.	do	do	Low to medium.
Water paint (whitewash, casein paint, etc.)	.0015	Complete	RC, white to black	None	Nearly smooth	None.
Emulsion paint, old type	.0020	do	do	do	do	Very low.
Emulsion paint, new type	.0020	do	do	Low to medium	Smooth	Low to medium.
Flat wall paint	.0030	do	do	Low	Nearly smooth	Do.
Stippled paint	Variable	do	do	do	Pebbly	Low.
Textured paint	do	do	do	do	Embossed	Do.

Semigloss wall paint	.0035	do	do	Medium	Smooth	Medium to high.
Gloss wall paint	.0035	do	do	High	do	Do.
Enamel	.0040	do	do	High to very high	Very smooth	High to very high.
Enamel, flat or rubbed	.0040	do	do	Low to medium	do	Do.
Aluminum paint	.0025	do	Silvery	Medium to high	Smooth	Very high.
House paint, white, tint	.0045	do	RC, white to light	Medium	do	High.
House paint, dark color	.0035	do	RC, dark to black	Medium to high	do	Medium.
Sand-finish house paint	Variable	do	RC, white to black	Low to medium	Sandy	High.

[1] Approximations for comparison, since any thickness varies in coating according to the nonvolatile content of the material and the spreading rate at which it is applied.

[2] If the wood is rough enough, smooth coatings may merely lessen without obliterating the roughness.

[3] Some woods darken with age and exposure to light regardless of any transparent finish that may be applied to them.

[4] The color of the wood is slightly darkened or intensified and may darken further with age and exposure to light.

TABLE 4.—*Characteristics of woods for painting and finishing (gaps in the table indicate inadequate data for classification*

Wood	Ease of keeping well painted I—easiest V—most exacting [1]	Weathering			Appearance for natural finish	
		Resistance to cupping 1—best 4—worst	Gray color developed [2]	Conspicuousness of checking 1—least 2—most	Color of heartwood (sapwood is always light)	Degree of figure on flat-grain surface
SOFTWOODS						
Cedar:						
Alaska	I	1	Silvery	1	Yellow	Faint.
California incense	I				Brown	Do.
Port Orford	I		Silvery	1	Cream	Do.
Western redcedar	I	1	Dark	1	Brown	Distinct.
White	I	1			Light brown	Do.
Cypress	I	1	Silvery	1	do	Strong.
Redwood	I	1	Dark	1	Dark brown	Distinct.
Pine:						
Eastern white	II	2	Light	2	Cream	Faint.
Sugar	II	2	do	2	do	Do.
Western white	II	2	do	2	do	Do.
Ponderosa	III	2	do	2	do	Distinct.
Fir, commercial white	III	2	Dark	2	White	Faint.
Hemlock	III	2	Light	2	Pale brown	Do.
Spruce	III	2	do	2	White	Do.
Douglas-fir	IV	2	Dark	2	Pale red	Strong.
Larch	IV	2	do	2	Brown	Do.
Pine:						
Norway	IV	2	do	2	Light brown	Distinct.
Southern yellow	IV	2	do	2	do	Strong.
Tamarack	IV	2	do	2	Brown	Do.

HARDWOODS						
Alder	III				Pale brown	Faint.
Aspen	III	2	Light	1	do	Do.
Basswood	III	2	do	2	Cream	Do.
Cottonwood	III	4	do	2	White	Do.
Magnolia	III	2	do		Pale brown	Do.
Poplar	III	2	Silvery	1	do	Do.
Beech	IV	4		2	do	Do.
Birch	IV	4	Light	2	Light brown	Do.
Gum	IV	4	do	2	Brown	Do.
Maple	IV	4	do	2	Light brown	Do.
Sycamore	IV				Pale brown	Do.
Ash	V or III	4	Dark	2	Light brown	Distinct.
Butternut	V or III				do	Faint.
Cherry	V or III				Brown	Do.
Chestnut	V or III	3	Dark	2	Light brown	Distinct.
Walnut	V or III	3	do	2	Dark brown	Do.
Elm	V or IV	4	do	2	Brown	Do.
Hickory	V or IV	4	Light	2	Light brown	Do.
Oak, white	V or IV	4	Dark	2	Brown	Do.
Oak, red	V or IV	4	do	2	do	Do.

[1] Woods ranked group V for ease of keeping well painted are hardwoods with large pores that need filling with wood filler for durable painting. When so filled before painting, the second classification recorded in the table applies.

[2] All woods usually weather to a gray color except at relatively high altitudes in mountainous country, where many woods weather to a brown color. There are insufficient data, however, for classifying woods for degree of brown color at high altitudes.

action of sun and rain, begins to wear away by crumbling or flaking. Repainting is usually considered necessary before too much summerwood becomes exposed. Coatings on interior surfaces seldom wear away by crumbling or flaking. But greater smoothness of painted surfaces may be demanded on interior surfaces, and the presence of wide bands of summerwood makes it necessary to take extra care in smoothing the surface before painting and in applying undercoats to keep the summerwood from showing as ridges in the coating, commonly called raised grain. Need for renewal of interior coatings usually arises when they have become too soiled to be washed easily, or have become faded, abraded, or accidentally damaged. Sometimes the easiest woods to paint smoothly may be considered too soft and too easily dented to be a good choice for interior woodwork, in which case a compromise must be reached between the properties that favor smooth painting and those that give enough hardness for the intended use.

For good service of paints or other finishes wood must usually be kept reasonably dry, in which case it is not subject to decay. But there are some places, such as outside steps, railings, fence palings, porch columns, and exterior paneled doors where joints in the structure may admit enough water to permit blue stain or decay to develop in nondurable kinds of wood. In such cases the performance of both wood and paint may often be improved by treating the wood with preservatives or water-repellent preservatives before painting (*8*). Even siding and trim may be treated with water-repellents to advantage, because storm water finds its way through the joints in well-built side walls in greater quantity than has been generally realized. Treatment of the wood with water-repellent preservative at least several days before erection has been found effective in minimizing such penetration of water.

The weathering of wood exposed without protective coating involves tendencies for relatively thin boards to cup or warp, for the development of a gray color, and for a roughening and a checking of the wood surface. If the wood is painted, the weathering tendencies begin to show up when the coating is allowed to go long enough to lose much of its protective power before the surface is repainted. Finishes rated low or very low in protective power in table 3 cannot be expected to prevent completely the weathering of woods that are low in resistance to weathering. Plywood usually has somewhat greater tendency to face checking than has solid lumber of the same kind of wood.

The great variations among woods afford a correspondingly wide choice of decorative effects obtainable with natural finishes; that is, finishes that are sufficiently transparent to reveal the grain and color of the wood, though the color may be modified if desired by the use of stains. The color and degree of figure imparted by the grain are the principal wood characteristics involved. Natural color occurs chiefly in the heartwood, for the sapwood is nearly always pale. Contrast in color often affords interesting patterns either when the wood surfaces consist partly of heartwood and partly of sapwood or when the heartwood of strongly colored woods is variable in color. Among softwoods, figure arises chiefly from the bands of darker colored summerwood contrasting with the lighter colored springwood of the annual growth rings. Flat-grain surfaces present stronger figure than edge-grain surfaces. Among hardwoods, figure arises chiefly from

the size and arrangement of pores. Such figure can be accentuated by filling the pores with dark- or light-colored filler, or it can be left as it is by using natural filler or leaving the pores unfilled. In some hardwoods such as oak and sycamore, figure is imparted by large medullary rays, which appear as flakes, especially on edge-grain surfaces. Figure in wood can come also from irregular grain, such as spiral grain and interlocked grain, in which case discriminating use of stain may enhance the figure greatly. Even defects such as knots, wormholes, rot pockets, bird pecks, bird's-eye, mineral streaks, sworls, and bark may be utilized for decorative effects.

House Paints for Exterior Wood

House paints are sold by trade brands, but without any generally recognized commercial standards of quality. Many manufacturers, however, print a statement of the composition on the label. Most manufacturers make one line of house paints that they mark with an identifying trade brand to which they give a central position in their advertising and in the displays in dealers' stores, and also make other paints for sale at prices lower than that of their advertised trade-brand paint. Since the cost of the paint is nearly always a small proportion of the total cost of painting, the cheaper paints should be avoided and the trade-brand paint should be insisted upon.

Three main groups of white or tinted house paints are readily recognizable among the available trade-brand paints (*12*). They are pure white lead (L) paint, titanium-lead-zinc (TLZ) paints, and titanium-zinc (TZ) paints.

Pure white lead paint contains basic carbonate white lead, linseed oil, drier, and thinner, and nothing else except the necessary tinting colors if the paint is tinted. It is available both in the prepared or ready-mixed form and in the form of soft paste to which its own volume of boiled linseed oil is added to make finish-coat paint, or its own volume of a mixture that is one-half boiled linseed oil and one-half paint thinner, to make priming paint. Differences among the trade-brand white lead paints are unimportant, except that the prepared paints are oil restricted, whereas the paste paints make oil-rich paint. Although pure white lead paint usually costs more than TLZ or TZ paints and usually becomes somewhat grayer from collection of dirt, it holds tints well and is notably trouble-free and reliable in performance, particularly when there are uncertainties about the paintability of the wood or the freedom of the structure from so-called moisture conditions.

The trade-brand titanium-lead-zinc paints vary widely in composition. As an indication of the composition considered of good quality, table 5 shows a TLZ paint that conforms to Federal Specification TT–P–102. Paints of lower quality are characterized by decreased content of white lead, decreased content of total linseed oil, and increased content of mineral spirits (volatile thinner) and drier. The TLZ paints are brighter in color, usually stay cleaner, and are cheaper than white lead paint.

Some trade-brand paints and many of the cheaper paints are titanium-zinc paints with no white lead at all. Often such paints are called fume-resistant because they do not turn black in air contami-

TABLE 5.—*Typical formulas for TLZ paint conforming to Federal Specification TT–P–102 and for TZ paint conforming to Federal Specification TT–P–103, with which label formulas for trade-brand paints may be compared*

Ingredients	Content of 1 gallon of paint		Customary label formula by weight based on—	
			Total paint	Pigments or liquids
TLZ paint:	*Gallon*	*Pounds*	*Percent*	*Percent*
White lead, basic carbonate	0. 030	1. 66	11. 0	17. 6
White lead, basic sulfate	. 024	1. 28	8. 5	13. 6
Zinc oxide	. 051	2. 37	15. 7	25. 2
Titanium dioxide	. 045	1. 47	9. 8	15. 6
Magnesium silicate	. 111	2. 64	17. 5	28. 0
Total pigment	. 261		62. 5	100. 0
Raw linseed oil	. 437	3. 39	22. 5	60. 0
Bodied linseed oil	. 140	1. 13	7. 5	20. 0
Total nonvolatile	. 838			
Mineral spirits	. 123	. 82	5. 4	14. 5
Liquid paint drier	. 039	. 31	2. 1	5. 5
Total vehicle (liquid)			37. 5	
Total paint	1. 000	15. 07	100. 0	100. 0
TZ paint:				
Zinc oxide	. 063	3. 08	22. 4	38. 0
Titanium dioxide	. 024	. 77	5. 6	9. 5
Titanium calcium	. 094	2. 55	18. 6	31. 5
Magnesium silicate	. 072	1. 70	12. 4	21. 0
Total pigment	. 253		59. 0	100. 0
Raw linseed oil	. 363	2. 82	20. 5	50. 0
Bodied linseed oil	. 183	1. 47	10. 7	26. 0
Total nonvolatile	. 798			
Mineral spirits	. 163	1. 07	7. 8	19. 0
Liquid paint drier	. 039	. 28	2. 0	5. 0
Total vehicle (liquid)			41. 0	
Total paint	1. 000	13. 74	100. 0	100. 0

nated with hydrogen sulfide as do paints containing lead compound. There are, however, few places in which there is a hazard of exposure of paints to hydrogen sulfide. The TZ paints are usually cheaper to make than the TLZ paints, but the TZ paints are more exacting about the conditions under which they will give their best performance. Table 5 reports a formula for TZ paint that meets the requirements of Federal Specification TT–P–103.

When using pure white lead paint, the painter may safely tint the white paint on the job to any light color desired. When using TLZ or TZ paints, however, the paints intended for use as white paint should not be tinted because the colors will soon fade badly. Such paints are made with freely chalking kinds of titanium dioxide. For tints, a chalk-resistant variety of titanium dioxide is necessary. Accordingly, the painter should purchase TLZ or TZ paint already tinted, or he may buy a so-called white base for tinting supplied for that purpose. The white base for tinting, however, should not be used as white paint because it will become unnecessarily dirty.

The exterior woodwork of new houses should be painted as soon after erection as is practicable. Corrosion-resistant nails, such as hot-dipped galvanized, aluminum- or cadmium-plated, are advisable to avoid unsightly rust spots on the paint, particularly if TLZ or TZ paints are to be used. If nails are countersunk, they should not be puttied until after the priming paint has been applied and has dried. Wood surfaces should be clean and reasonably dry, and any splinters, loose grain, or similar blemishes should be smoothed off, but otherwise no special preparation for painting is necessary.

The first paint job on a new house is the most important one it will ever receive, because the first paint is normally expected to remain for the useful life of the house as the foundation for all subsequent paintings. If serious mistakes later require complete removal of paint, they impose an unreasonable burden of maintenance expense.

New houses are best painted with three coats of paint. Two-coat painting on new wood is now generally recognized as inferior painting. In former times when most trade-brand paints contained at least 0.87 of a gallon of total nonvolatile per gallon, instead of the 0.798 or 0.838 of a gallon for the paints in table 5, fully adequate painting could be done in 2 coats, provided the first coat was spread so that a gallon covered no more than 450 square feet and the second so that a gallon covered no more than 550 square feet. Since it is impracticable to apply paints more generously, the present paints at those spreading rates make thinner coatings than are desired. With three coats, however, the desired thickness of coating is obtainable without piling the paint on so heavily. For paints of the content of nonvolatile indicated in table 5, the first coat may be applied at 600, the second at 800, and the third at 700 square feet per gallon. If the paint is lower in content of nonvolatile, the spreading rates should be proportionately lower.

On the softwoods listed in table 4 as group IV in painting characteristics, paint service can be greatly improved by using aluminum house paint for the first or priming coat, though it is essential that the aluminum paint be one made especially for use on exterior wood rather than a paint for metal or other purposes. Two coats of finish paint are necessary over aluminum primer for adequate thickness of coating and to hide the gray color of the aluminum. If for any reason aluminum priming paint is not used, softwoods of group IV should be primed either with pure white lead paint or with a special house-paint primer of the same trade brand as the finish paint to be used over it. Nearly all trade-brand paints include special primers that are made of titanium pigments and white lead and little or no

304696 O—55——13

zinc oxide. For woods of group IV the special primer should be one containing no zinc oxide.

When woods of groups I, II, or III in table 4 are painted with pure white lead paint, the white lead paint may be used for the priming coat as well as for finish coats. Makers of pure white lead in the prepared form also offer a special priming mixture that may also be used for the purpose. If the finish paint of woods of groups I, II, or III is to be a TLZ paint, the priming paint should be either pure white lead paint or the special priming paint of the same trade-brand as the finish paint. In the few places where hydrogen sulfide in the air makes it necessary to choose TZ paint for finish coats, the special primers containing white lead are excluded and the priming paint must be either TZ paint itself or aluminum house paint.

Paints of the darker colors cannot be made by tinting white-base paint because they admit little or no white pigment. As a rule, the exclusion of white lead and zinc oxide requires that such paints contain a substantial amount of bodied oil or varnish, which often gives them some of the characteristics of enamels. Except for the red iron-oxide paints (barn paints), paints of the darker colors, which are often called trim paints, usually should be used for finish coats only. For priming, either pure white lead paint or one of the special house-paint primers, tinted either dark gray or a color approaching that of the finish coat, should be used.

Paints should not be thinned excessively by the painter. For 2-coat painting, prepared primers and paints should not be thinned at all. For 3-coat painting, the finish coat normally should require no thinning; although in cold weather or under some other exceptional circumstances, slight thinning not to exceed 1 pint of turpentine or mineral spirits, not oil, to the gallon may be desirable. For 3-coat work, the priming paint, unless it is aluminum paint, may well be thinned with 1 to 2 pints of thinner to the gallon.

Natural Finishes for Exterior Wood

Exterior woodwork that contains joints that may retain rainwater and that needs to be kept as stable in dimensions as possible, such as paneled doors and window sash and casings, needs the degree of protection obtainable only with surface coatings ranked medium or better in protection in table 3. For natural finish, then, they should be finished with three coats of spar varnish after wood stain has been applied, if stain is desired. Hardwoods of group V should also have their pores filled with wood filler before varnishing. If there is sapwood or if the wood is one lacking natural resistance to decay, treatment of the wood with water-repellent preservative, preferably by dipping before installation, is also desirable.

In choosing varnish finish rather than paint, consideration should be given also to the facts that natural finishes are much less durable than paints and that they more urgently require renewal before they wear out sufficiently to let the process of wood weathering set in. Where varnish finishes are fully exposed to the weather, renewal every 6 months may be necessary, but the shelter provided by overhanging porch roofs or by deep setback into the side wall may extend the life

of the varnish materially. Moreover, after a limited number of renewals, varnish finishes are inclined to check or alligator badly; complete removal then becomes necessary before refinishing.

Because of the limitations of varnish finish its proper maintenance is usually too expensive for large areas (*9*). Though no natural finish can be recommended very highly for siding and trim, some houseowners have been reasonably well satisfied with penetrating finishes consisting of linseed oil or of wood sealers, preferably carrying a small proportion of pigments of the desired color. The natural finishes can give satisfaction only where frequent renewal is acceptable. Where there is full exposure to sunshine and rain, renewal twice a year may be needed. Shelter such as that of widely overhanging eaves or shade from trees lengthens the time between needed renewals.

Oil or wood-sealer finishes should saturate the wood surface without leaving a coating of observable thickness over it. To insure that condition, any oil or sealer that fails to penetrate into the surface within a few minutes after application should be wiped off before it has time to dry. Natural finishes preferably should contain fungicide such as chlorinated phenol, except in locations known to be always too dry for fungus growth. Alternatively, the wood may be treated with water-repellent preservative before the natural finish is applied. Sapwood or other wood lacking natural resistance to decay may well be treated with water-repellent preservatives to prevent blue stain or decay.

Shingle stains may be considered among the natural finishes, although they contain enough pigment to conceal the grain of the wood at least partly (*11*). They are commonly considered much more durable than other natural finishes because they are usually allowed to go at least 4 or 5 years before renewal. In the sense of retaining color and concealing any graying of the wood, they are durable for such periods; but in the sense of retaining enough protection to prevent checking and roughening of wood surfaces, they are not durable for much more than 1 year. Accordingly, shingle stains are best adapted for intentionally rough surfaces such as shingles and siding turned with the sawed side out. Shingle stains do not maintain adequate protection for use on exterior doors or windows or other wood surfaces that should be kept smooth.

Interior Walls and Ceilings

Exterior paints or varnishes are seldom a good choice for interior surfaces because they may yellow with age and may be too slow in drying and in becoming hard enough for good service. Moreover, the degree of gloss of coatings must be subject to control between very wide limits to meet the requirements of appearance and reflection of light indoors.

Highly glossy enamels or varnishes are too harsh in appearance and in light reflection to be suitable for surfaces of large area, although they are often appropriate for wood trim and furniture. Of course, some of the highly glossy coatings can be rubbed with pumice stone and oil to any desired degree of medium or low gloss, but the expensive labor required usually precludes their use for that purpose. There are two classes of gloss enamels, one sufficiently rich in pig-

ments for the enamel to be used for priming or undercoat as well as for finish coat, and the other requiring specially prepared material for the undercoating. The former is less expensive and is by far the more widely used; two coats are usually sufficient. The latter is justifiable only when the most elegant appearance is demanded and careful sanding of the wood beforehand and sanding of the undercoater after it has dried can be afforded in order to get a surface smooth enough to realize the full possibilities of the finish enamel. At least two coats of undercoater and one of enamel are usually needed for good results.

Semigloss enamels or interior paints are lustrous without being harsh. They are suitable for wood trim, doors and windows, kitchen cabinets, and for the large wall and ceiling areas of kitchens and bathrooms. The semigloss enamels may be used for priming or undercoating as well as for the finish coat. Two coats should generally suffice.

Most gloss and semigloss enamels are of the "oil" type; that is, their vehicles consist of drying oils, varnishes, and petroleum thinners and the enamels must not be thinned with water. Flat (glossless) paints, however, are of greater variety. There are ordinary oil paints that require prior application of a primer or sealer; the "one-coat" or "self-sealing" paints, which can be applied directly on porous surfaces; the rubber-emulsion paints; the resin-emulsion paints; the protein (casein) paints; and the calcimines. The last four named are water-thinned paints. The first three named, if of good quality, stand washing well, the fourth reasonably well, the fifth only when done very gently, and the last is easily removed by washing.

Flat paints cannot be highly recommended for wood windows, doors, cabinets, and trim, though they may be used on well-sealed or well-primed wall or ceiling panels of wood or plywood. When used on wood, flat paints should be of an oil type and not of the water-thinned varieties. Any of the flat paints, according to preference, are suitable for plaster, plasterboard, or fiberboard.

A wide variety of natural finishes is available for interior woodwork according to the decorative characteristics of the kind of wood and the owner's preference in finish. Tables 3 and 4 suggest the many possibilities. For penetrating finishes, there is first the choice whether the wood is to be stained or left in its natural color.

On softwoods, staining is usually done with pigmented oil stains. The softer springwood absorbs much more stain than the summerwood, which may result in a reversal of the normal color gradation in which the summerwood is the darker. To prevent such reversal, the wood may first be sealed with wood sealer and the stain be applied as a glaze, which gives a more nearly uniform coloring. On hardwoods, the staining may be done with pigmented oil stains, but clearer coloring is attained with stains made from dyes. Oil stains and so-called non-grain-raising stains require no subsequent sanding of the surface, whereas water stains raise the wood grain and require light sanding after the stain dries.

Hardwoods of group V in table 4 usually require application of wood filler when varnish finish is chosen, but such filling is optional if a penetrating finish is selected. The filler may be either a natural

one, which is transparent and does not accentuate the pores, or it may be colored to make the pattern of pores more conspicuous. Colored fillers are generally darker than the wood color, although for unusual effects they may be lighter in color.

The final protective finish may be either a penetrating one, such as linseed oil, one thin coat of shellac, or a wood sealer, or it may consist of two or more coats of varnish. The penetrating finishes may be waxed or not according to preference. The varnish finishes may be glossy or dull according to the kind of varnish chosen. When desired, a glossy varnish may be rubbed to a medium or low gloss with pumice stone and oil.

Floors

Wood floors exposed to the weather, such as porch floors, are commonly painted with two coats of porch and deck paint made for the purpose. Two coats are needed. Natural finishes are rarely considered durable enough for floors exposed to the weather. Concrete floors may be painted with the porch and deck paint. Concrete floors laid on soil, however, may not hold paint well unless the soil is sufficiently well drained or protected with a vapor barrier to keep the concrete dry at all times.

When desired, interior wood floors may be painted with two coats of floor paint or may be given a natural finish. Concrete floors may be painted or left unpainted.

Interior floors made of hardwoods most often are given a natural finish (*23*). There are three kinds of natural finishes widely used on floors. Shellac finish dries rapidly and stays light in color but does not stand exposure to water well. Floor-sealer finish stands wear well because it can be easily renewed at worn places without refinishing the whole floor. Floor varnish provides the most lustrous finish. When shellac is used, three coats are applied and the surface is gone over lightly with steel wool after the first and again after the second coat has been applied. Shellacked floors may be waxed if desired. Wood sealer is usually applied by mopping and is allowed to stand a few minutes before the excess is wiped off. For best appearance and durability it should then be buffed with steel wool, preferably by using a buffing machine. On newly sanded floors two coats are generally recommended. The floors may then be waxed if desired. For varnish finish, three coats of varnish should be applied, with sufficient time for each coat to dry before the next one is put on. It is inadvisable to apply shellac for the first coat and varnish for the others because such coatings are likely to show scratches badly. Varnished floors are seldom waxed.

Oak floors should be filled with wood filler, either natural or colored, before shellac or varnish finish is applied. When floor seal finish is used, application of filler is optional.

Some forms of wood, laminated wood, or plywood finish flooring can be purchased with the finish already applied at the factory. Finish of the wood-sealer type is usually chosen for application at the factory. Reasonable care should be taken after such flooring has been laid in a new house to protect it from heavy traffic incident to completion of the house. Factory-finished flooring is usually maintained as described for floor-sealer finishes.

Plywood and Wallboards

The painting and finishing characteristics of plywood are essentially those of the kind of wood with which the plywood is faced. In large sheets of plywood, any wood checking is more objectionable in appearance than it is on boards of lumber. Plywood with hardwood faces usually is not much more prone to checking than lumber of the same species, but plywood faced with most softwoods is likely to check to some extent even when used indoors with protective finishes. Such checking is more conspicuous with some finishes than with others. It is most obtrusive with highly glossy enamel finishes of light color, somewhat less so as the gloss diminishes and also as the color is darkened greatly. With opaque finishes the checking is least objectionable when flat finishes with rough surfaces are chosen, such as stippled, textured, or sanded finishes. Checking is less readily observable with natural than with opaque finishes, because the grain pattern of the wood distracts attention from the checking.

Softwood plywood may be used without danger that checking will mar the finish if the exposed face of the plywood is covered with paper, cloth, or resin-impregnated paper firmly glued in place. For exterior exposure, of course, the glue must be thoroughly weather resistant.

Plasterboards and fiberboards are, for the most part, paintable with the same materials and methods that are suitable for plaster.

The use of sheet materials for covering walls and ceilings poses problems at the joints between sheets. Sometimes the joints are deliberately left evident as part of the decorative scheme. Otherwise, they may require special treatments, such as taping to conceal the joints and to permit smooth covering of them with paint. Manufacturers of the sheet materials usually furnish detailed directions or suggestions for accomplishing the desired results.

PROTECTION AGAINST DECAY AND TERMITES

Wood used under conditions where it will always be dry or even where it is subject to short periods of intermittent wetting followed by rapid redrying will not decay. However, all wood and wood products as used in construction are susceptible to decay if kept wet for long periods under temperature conditions favorable to decay organisms. Most of the wood as used in a house is not subjected to such conditions. There are places where water can work into the structure but such places can be protected. Protection is accomplished by methods of design and construction, by the use of suitable materials, and in some cases by the use of treated material (*50*).

Wood is subject to attack by termites and some other insects. Termites can be grouped into two main classes—subterranean and dry-wood. Subterranean termites are important in the southern part of the United States, but they are relatively unimportant in the northernmost States (see termite map, fig. 144). Buildings may be fully protected against subterranean termites by incorporating comparatively inexpensive protection measures during construction. Drywood termites are found principally in southern Florida and southern California. These termites are more difficult to control, but the damage is less serious than that caused by subterranean termites.

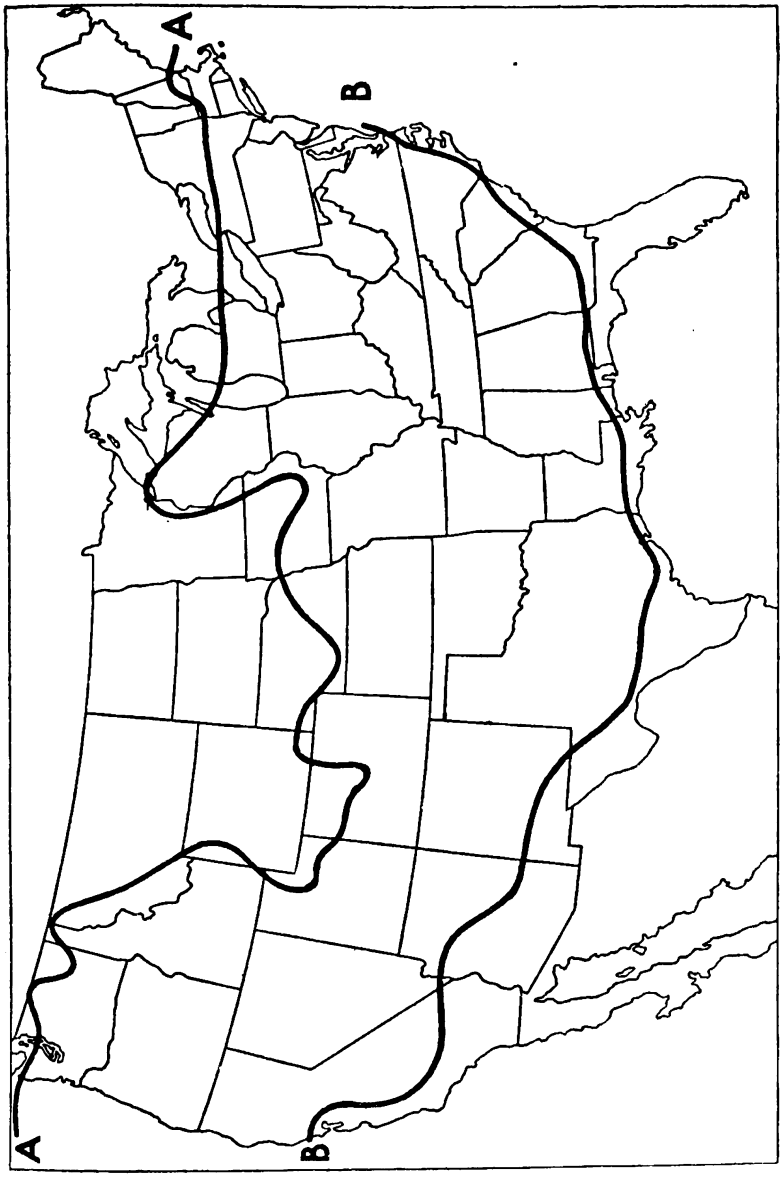

M 16783 F

FIGURE 144.—Map showing (line *AA*) the northern limit of damage by subterranean termites in the United States; *BB*, the northern limit of damage by dry-wood or nonsubterranean termites.

Wood has proved itself through the years to be desirable and satisfactory as a building material. Damage from decay and termites has been small in proportion to the total value of wood in residential structures, but it has been a troublesome problem to many homeowners. With changes in building-design features and use of new building materials, it becomes pertinent to restate the basic safeguards to protect buildings against both decay and termites.

Decay

Decay of wood is caused by certain fungi that can utilize wood for food. These fungi, like the higher plants, require air, warmth, food, and moisture for growth (*27*, *54*). Their fresh surface growths on wood usually are fluffy or cottony and may appear as fan-shaped patches, strands, or rootlike structures, often white or brown. Sometimes fruiting bodies are produced in the form of toadstools, brackets, or crusts. Early stages of decay caused by these fungi are often accompanied by a discoloration or water-soaked appearance of the wood. Advanced decay is easily recognized because the wood has then undergone definite changes in properties and appearance. A brown crumbly or white spongy condition of the wood often characterizes this advanced stage.

Fungi grow most rapidly at temperatures of about 70° to 85° F. Elevated temperatures such as used in kiln-drying lumber kill fungi, but low temperatures, even far below zero, merely cause them to remain dormant.

The moisture requirements of fungi are within quite definite limitations. Wood-destroying fungi will not become established in dry wood. The upper limits of moisture are not well known, but short of complete waterlogging (which excludes all air) any wood moisture content above 20 percent will probably support decay fungi. Brown crumbly decay, in the dry condition, is sometimes called "dry rot," but such wood must of necessity be damp if rotting is to occur.

The presence of mold or stain fungi should serve as a warning that conditions are or have been suitable for decay fungi. Heavily molded or stained lumber should therefore be especially examined for evidence of decay. Furthermore, such discolored wood is not entirely satisfactory for exterior millwork because it has greater water absorptiveness than bright wood.

The natural decay resistance of all common native species of wood lies in the heartwood. When untreated, the sapwood of substantially all species has low resistance to decay and usually has a short life under decay-producing conditions. The decay resistance of heartwood in service is greatly affected by differences in the character of the wood, the attacking fungus, and the conditions of exposure. A different length of life may therefore be obtained from pieces of wood cut from the same species or even the same tree and used under apparently similar conditions. Further, in a few species, such as the spruces and the white firs (not Douglas-fir), the colors of the heartwood and of the sapwood are so similar that frequently the two cannot be easily distinguished. Of the species of woods commonly used in home construction the heartwood of baldcypress, redwood, and the cedars are classified as being highest in decay resistance.

Subterranean Termites

Subterranean termites are the most destructive of the insects that infest wood in houses. The chance of infestation is great enough to justify preventive measures in the design and construction of buildings in areas where termites are common (*49*).

Subterranean termites are common throughout the eastern half of the United States and along the Pacific coast. They are abundant from Massachusetts south along the Atlantic coast and along the Gulf of Mexico, in the Ohio River Valley, in the southern part of the Missouri and Mississippi River Valleys, and in southern California (fig. 144).

One of the requirements for subterranean-termite life is the moisture they find in the soil. These termites become most numerous in moist, warm soil containing an abundant supply of food in the form of wood or other cellulosic material. In their search for additional food (wood) they build earthlike shelter tubes over foundation walls or in cracks in the walls, or on pipes or supports leading from the soil to the house. These tubes are from ¼ to ½ inch or more in width and flattened, and they serve to protect the termites in their travels between food and shelter.

Since subterranean termites eat the interior of the wood, they may cause much damage before they are discovered. They honeycomb the wood with definite tunnels that are separated by thin layers of sound wood. Decay fungi, on the other hand, soften the wood and eventually cause it to shrink, crack, and crumble without producing anything like a continuous tunnel. When decay fungi and subterranean termites are present in the same wood, even the layers between the termite tunnels will be softened.

Dry-Wood Termites

Dry-wood termites fly directly to and bore into the wood instead of building tunnels from the ground as the subterranean termites do (*40*). Dry-wood termites are common in the tropics, and damage has been recorded in the United States in a narrow strip along the Atlantic coast from Cape Henry, Va., to the Florida Keys, and westward along the coast of the Gulf of Mexico to the Pacific coast as far as northern California. Damage of serious proportions has been noted in southern California and in localities around Tampa, Miami, and Key West, Fla. Infestations may be found in structural timber and other woodwork in buildings and in furniture, particularly where the surface is not adequately protected by paint or other finishes.

Dry-wood termites fly directly to the bore into the wood instead of broad pockets, or chambers, connected by tunnels about the diameter of the termite's body. They destroy both springwood, the lighter colored usually softer part of wood, and the usually harder summerwood, whereas subterranean termites principally attack the springwood. Dry-wood termites remain hidden in the wood and are seldom seen, except when they make dispersal flights.

Safeguards Against Decay

A dry piece of wood when placed under an open umbrella will stay dry and never decay (*60*). This principle of "umbrella protection," when applied to houses of proper design and construction, is a good precaution. The use of dry lumber in designs that will keep the wood dry is the simplest way to avoid decay in buildings.

The building site should be well drained. Stumps, wood debris, stakes, or wood concrete forms left in place frequently lead to decay and should be removed.

Untreated wood should not come in contact with the soil. It is desirable that the foundation walls have a clearance of at least 8 inches above the exterior finish grade, and that the floor construction have a clearance of 18 inches or more from the bottom of the joists to the ground in basementless spaces. The foundation should be accessible at all points for inspection. Porches, terraces, and the like that prevent this should be isolated from the soil by concrete or from the building proper by metal barriers or aprons (fig. 145).

Steps, and stair carriages, posts, wallplates, and sills should be insulated from the ground with concrete or masonry. Sillplates and other wood in contact with concrete near the ground should be protected by a moistureproof membrane, such as heavy asphalt paper. Girder and joist openings in masonry walls should be big enough to assure an air space around the ends of these members (*50*).

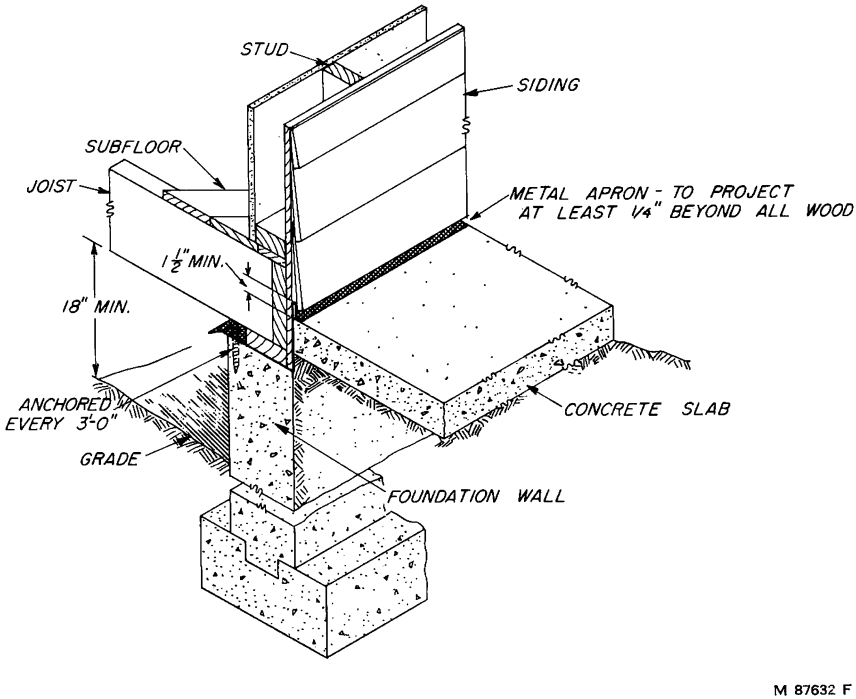

FIGURE 145.—Metal shield used to protect wood at porch slab

Design details.—Surfaces like steps, porches, door and window frames, roofs, and other projections should be sloped to promote run-off of water (*10*) (see Porches and Garages, p. 164). Noncorroding flashing should be used around chimneys, windows, doors, or other places where water might seep in (see Flashing, p. 158). The use of roofs with considerable overhang should be considered since they give added protection to the siding and other parts of the house. Gutters and downspouts should be placed and maintained to divert water away from the buildings (*61*). Porch columns and screen rails should be shimmed above the floor to allow quick drying, or posts should slightly overhang raised concrete bases (see Porches and Garages, p. 164).

Exterior steps, rails, and porch floors exposed to rain have a high decay hazard, particularly in warm, damp parts of the country. Pressure treatment in accordance with the recommendation of Federal Specification TT–W–571 provides a high degree of protection against decay and termite attack. Where pressure-treated wood is not readily obtainable, the on-the-job application of water-repellent preservatives by dipping or soaking has been found to be worthwhile. The wood should be dry, cut to final dimensions, and then dipped or soaked in the preservative solution (*4, 20, 56*). Soaking is the best of these nonpressure methods, and the ends of boards should be soaked as long as feasible. It is important to protect the end grain of wood at joints, since this area absorbs water easily and is the most common infection point. The edges of porch flooring should be coated with thick white lead or other durable coating as it is laid. Leaking pipes should be remedied immediately to prevent damage to the house, as well as to guard against possible decay.

Green or partially seasoned lumber.—Construction lumber that is green or partially seasoned is likely to be infected with one or more of the staining, molding, or decay fungi. Such wood may contribute to serious decay in both the substructure and exterior parts of buildings and, therefore, should be avoided. If wet lumber cannot be avoided, or if wetting occurs during construction, the wood should not be fully enclosed or painted until thoroughly dried (*62*).

Water vapor from the soil.—Where houses without basements are built on poorly drained sites with only a crawl space between the soil and the floor, this space may become very humid. During the winter months when the sills and outer joists are cold, moisture condenses on them, and, in time, the wood absorbs so much moisture that it is susceptible to attack by fungi. Unless ample ventilation through opposite sides of the foundation walls allows this moisture to dry out before temperatures favorable for fungus growth are reached, considerable decay may result. However, this decay may progress so slowly that no weakening of the wood becomes apparent for a few years. Placing a layer of 55-pound roll roofing over the soil to keep the vapor from getting into the crawl space would prevent such decay (*14*). This might be recommended for all sites where, during the cold months, the soil is wet enough to be compressed in the hand. All of the cost of this roll roofing need not be charged to decay prevention, since ventilators can be kept closed in cold weather with a resultant saving in fuel. In addition, with the soil cover, the crawl space will be dry enough for the

storage of garden tools, and a clean surface will be provided when it is necessary to inspect the utilities and subfloor structures of the house.

Water vapor from household activities.—Water vapor is also given off during cooking, washing, and other household activities. This vapor can pass through walls and ceilings during very cold weather and condense on sheathing, studs, and rafters, and perhaps make them susceptible to decay. A vapor barrier of an approved type is needed on the warm side of walls (see Vapor Barriers, p. 109). The attic space should be ventilated (*42*) (see Ventilation, p. 110).

Water vapor from the atmosphere.—When the moisture content of the air is high during the summer, pipes and other cold objects frequently "sweat." This is another example of condensation, and if the water drips on adjoining wood it may make the wood wet enough to decay. Summer temperatures are generally favorable for fungi. Since it is difficult to control the moisture in the air, the easiest procedure is to insulate the pipes or devise ways to keep the water from dripping on wood.

Safeguards Against Termites

The best time to provide protection against termites is during the planning and construction of the building. The first requirement is to remove all woody material from the soil at the building site before and after construction. Steps should also be taken to drain the site or to keep the soil under the house as dry as possible. Next, the foundation should be made impervious to subterranean termites to prevent them from crawling up through hidden cracks to the wood in the building above. Properly reinforced concrete makes the best foundation, but unit-construction walls or piers capped with at least 4 inches of reinforced concrete are also satisfactory. No wood member of the structural part of the house should be in contact with the soil. Metal termite shields may also be used, but they should be considered only as a supplement to good construction and not as a substitute for it (fig. 146). These shields should be of rust-resistant metal and must be continuous around the perimeter with soldered or impervious interlocking joints. Shields should extend out from the foundation at a 45° angle for a horizontal distance of at least 2 inches. Holes through which anchor bolts pass should be sealed with coal-tar pitch. Wood steps should be insulated from the ground with concrete or masonry. Any wood used in secondary appendages such as wall extensions, decorative fences, and gates, etc., should be pressure-treated with a good preservative.

In regions where dry-wood termites occur, the following measures should be taken to prevent damage:

1. All lumber, particularly secondhand material, should be carefully inspected before use. If infected, discard the piece.
2. All doors, windows, especially attic windows, and other ventilation openings should be screened with metal wire screen with not less than 20 meshes to the inch.
3. Preservative treatment in accordance with Federal Specification TT–W–571 can be used to prevent attack in construction timber and lumber.

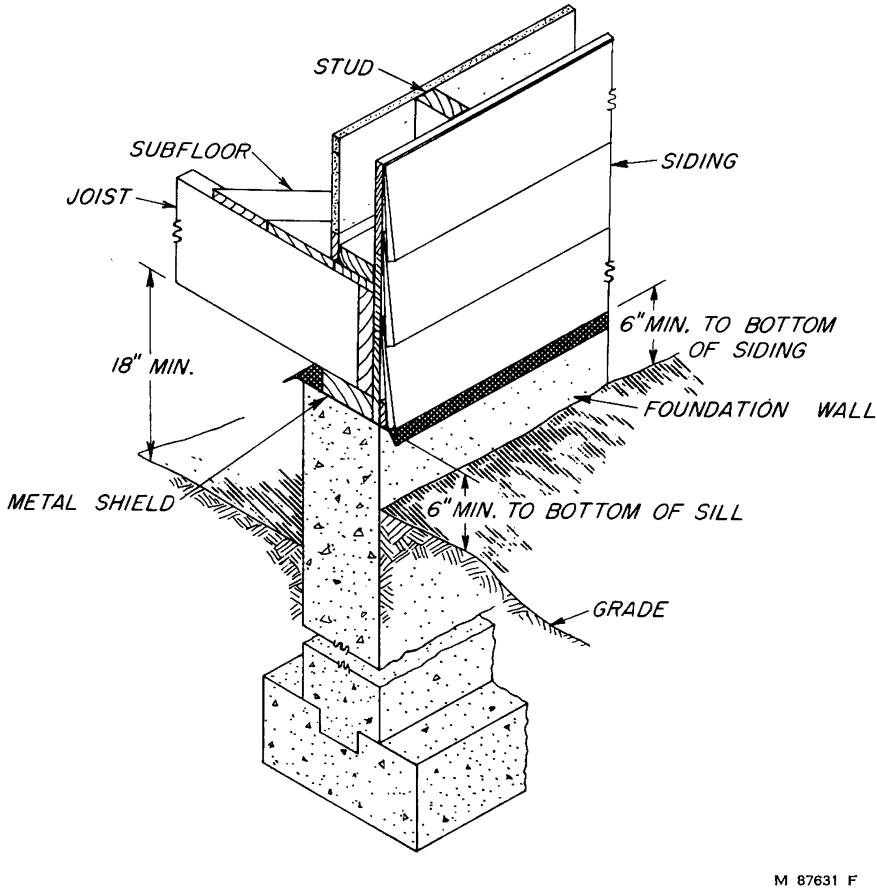

FIGURE 146.—Termite shield used to protect wood framing and siding.

4. Several coats of house paint will provide considerable protection to exterior woodwork in buildings. All cracks, crevices, and joints between exterior wood members should be filled with putty or plastic wood before painting.

5. The heartwood of foundation-grade redwood and baldcypress, particularly when painted, is more resistant to attack than most other native commercial species.

Maintenance Inspections

Many factors must be taken into consideration to prevent decay and termite damage in houses. As a safeguard against some overlooked item, a periodic inspection is essential. This examination should be made early each spring.

Inspection of crawl space.—The foundation wall, exterior and interior, and the adjoining sills and joists should be periodically inspected. If strands of a water-conducting fungus are found, they should be removed. If the soil is wet and the sills and joists as well, it

is usually necessary either to increase ventilation or to apply a soil cover. If termite tubes are found, they should be broken and the soil around the foundation should be treated with a termite poison (*49, 50*). It is also a good plan to assure that all wood debris is removed after construction.

Inspection of attic.—The attic should be inspected for condensation on the roof boards, watersoaked or stained wood, and rusty nails. Observation after a period of very cold weather may reveal ice on roof sheathing and on roofing nails protruding through the sheathing. If any of these conditions are found, the attic requires additional ventilation or a vapor barrier in the ceiling below the attic. Living habits might also have to be modified so as to vent the water vapor before it is spread; e. g., if clothes are dried in the utility room, the window should be opened during the drying period.

Inspection of exterior.—Wood near the ground should be inspected to see that wood finish is at least 6 inches from any soil and for signs of decay or termites. Examine the flashing and see that gutters and downspouts are functioning properly. Paint blistering may indicate excessive moisture in the wood or trapped water vapor within the wall. All wood joints should be tight, but calking and painting should be delayed until the wood is dry.

PROTECTION AGAINST FIRE

Fire hazards exist to a greater or less extent in nearly all houses, and even though the dwelling is of the best fireproof construction, hazards are still present as a result of the occupancy and the presence of combustible furnishings and other contents. Fires in houses may occur as a result of construction defects, or they may start in the combustible contents of the building. The elimination or correction of details of construction that constitute fire hazards is within the control of the builder. Elimination of fires that may start in some of the furnishings or contents of the house is the responsibility of the occupant.

Elements of Fire Hazard

Causes of fires.—The following tabulation showing the main causes of fires in houses is based on an analysis of fires in dwellings made by the National Fire Protection Association.

Causes of fires in dwellings:	*Percen*
Smoking and matches	30
Heating defects:	
Defective flues and chimneys	12
Defective or overheated appliances	6
Inadequate clearance from combustible materials	2
Miscellaneous	1
Misuse of electricity:	
Fixed services	10
Appliances or fixtures	2
Exposure:	
Sparks on roof	6
Other	2
Inadequate rubbish disposal methods	4
Kitchen hazards	4

Causes of fires in dwellings—Continued	*Percent*
Hot ashes and coals	3
Flammable liquids	2
Lightning	2
Spontaneous ignition	2
Open fireplaces	2
Children with matches	2
Flammable decorations	1
Candles and open flames (other than stove)	1
Incendiary	1
Vehicle fires	1
Defective hot-water tanks	1
Explosion (heat and power sources)	1
Miscellaneous	2
Total	100

Furnishings.—The living quarters of a house contain combustible furnishings such as drapes, rugs, bedding, clothing, magazines, newspapers, and books, and combustible furniture such as tables, chairs, bookcases, beds, and dressers. If the home has an attic and basement, combustible items usually are present in these locations. If a match or a cigarette is the cause of a fire, some one item of the contents or furnishings provides the next step in the progress of the fire. It may be the bedding, a curtain, upholstery or a wastepaper basket. The fire, once started, gathers momentum within the furnishings of the room and, regardless of whether the walls and ceilings are combustible or not, the furnishings provide enough fuel for a serious fire.

Construction

Combustible construction material too close to chimneys, fireplaces, heating units, smoke pipes, hot-water heaters and hot-air heating ducts constitutes a fire hazard (*48*). Chimneys without flue lining and defective electrical wiring also constitute hazards. Methods of framing and proper construction of chimneys and fireplaces are described on page 171. Electrical wiring is discussed on page 97. Most cities and towns in the United States have codes or laws to insure methods of construction that provide for safety against fire.

After a fire is started inside a house, it may spread not only by direct contact of the flames with combustible material but also by the movement of hot air and gases through open channels. The heated gases move through halls and stairways and between floor joists and wall studs if there are no fire stops. In platform construction, fire stops are placed at the bottom and top of stud spaces and at the ends of the joists where they bear on the outer walls. In balloon framing, the open space or flue between floors should be closed with a fire stop. The space between the joists should also be closed. Fire-stopping may be of 2-inch lumber cut to fit tightly between studs and joists, or it may be concrete, hollow tile, or brick. Fire-stopping at framed openings around chimneys should be of noncombustible material.

Exposure of combustible materials to fire.—Most fires start in the interior parts of the house (see tabulation, p. 202). In such a fire, concealed materials, such as sheathing, lath, studs, joists, and flexible and fill insulation, contribute little or no fuel to the fire until the wall

or ceiling covering is burned through or sufficient heat is developed to cause spontaneous ignition. Materials in these locations present less potential fire hazard than exposed materials that are set afire by contact with flame or hot gas or by radiant energy. Typical of exposed combustible materials are fiberboard walls and ceilings, plywood walls and ceilings, wood floors and trim, wood roof boards and rafters in attics, and wood subflooring and joists in the basement. The wall and ceiling materials contribute no fuel until they are exposed to direct flames or until the temperature of the room rises sufficiently to cause ignition. In many cases a severe fire develops from the furnishings alone, with combustible walls or ceilings taking no part until the fire has reached the dangerous flashover stage. On the other hand, if the fire starts near the walls or in a corner of a room, combustible wall coverings can be expected to contribute fuel at an earlier stage of the fire.

Control of Fire Hazard

The number of the potential fire hazards in a home is often considerable regardless of the types of materials entering into the construction of the dwelling. An appreciation of what constitute fire hazards, both in the house structure and in furnishings, suggests commonsense methods to eliminate or to reduce them, such as attention to details of construction of a new dwelling, observance of safety precautions about the house, and the development of good housekeeping habits in such places as basements, attics, and garages. If all these safety practices were carefully observed, the fact that a house contains combustible construction materials would be of minor concern from the standpoint of fire hazard. Unfortunately, such safety practices are not universally followed, and accidents can and do occur.

The resistance to fire spread of wood and other combustible construction materials can be increased by impregnation with surface applications of special fire-retardant materials (*47*, *58*). Pressure-impregnation treatments, however, add considerably to the cost of the materials, and their extensive use in small-house construction cannot always be justified. The simplest and cheapest method of providing an extra measure of safety to exposed surfaces are fire-retardant coatings, which may be applied by the builder or owner. Realizing the need for such coatings, the Forest Products Laboratory has done considerable research in this field and has developed several formulations for fire-retardant coatings of good effectiveness (*31*, *58*). Satisfactory proprietary preparations also are now available.

Treating wood, fiberboards (*59*), etc., to produce a more fire-retardant product is essentially a job for the producer or processor of such materials. A fire-retardant structural fiber insulation board is now available (class F, as specified in Commercial Standard CS 42–49) (*51*).

METHODS OF REDUCING BUILDING COSTS

The prospective home builder is usually interested in methods of reducing the cost of his house. At the same time, however, he does not wish his house to have deficiencies that may increase maintenance

or decrease livability or resale value. These combinations are somewhat difficult to achieve for individually built houses.

Large operators are able to take advantage of methods used to reduce costs. These operators often build hundreds of houses each year. Because of their need for huge volumes of materials they often buy direct from the manufacturer. They also develop the building sites from large sections of land. Much of the work, such as installation of the roofing, application of gypsum-board interior finish, and painting, is done by subcontractors. Their own crews are specialists, each crew becoming proficient in its own phase of the work. Central shops are usually established where all material is cut to length and often preassembled before being trucked to the site. These methods reduce the cost of the individual house in a large building project, but unfortunately most of them cannot be applied to the individual house built by the owner. The following suggestions are intended as possible methods by which the owner may reduce the cost of his house.

Design

The design or layout of the house is an important factor in reducing costs and should be carefully considered in plan selection.

1. Select the plan so that room sizes will permit the use of standard-length material for joists and rafters without waste. Get advice from an architect, engineer, or other reliable authority as to the best means of accomplishing this saving. Study the room arrangement so that plumbing and heating lines will have short runs. If an expandable house is desired, the use of a steeper pitched roof might provide additional space in the attic for future rooms, or a plan may be selected to which additions can be easily made. A rectangular plan without variation is usually the lowest in cost.

2. The type of foundation to be used, such as slab, crawl space, or basement is an important consideration. Base this selection on climatic conditions and needs of the family for storage space and hobby or recreation space. While space in the basement is not so desirable as in areas above grade, its cubic-foot cost is a great deal cheaper. A slab-type house including utility and sufficient storage and recreational space may be as costly as a house with a full basement.

3. A flat or low-pitched roof is often lower in cost when ceiling joists and roof rafters can be combined. Construction is simpler, and less material is used than in most pitched roofs. The major factor in this type of roof is the design, so that the appearance will be pleasing and somewhat in keeping with neighboring houses.

Pitched roofs should have simple lines for lower costs. Variations in the roof add somewhat to the framing costs; however, slight changes are desirable from the standpoint of a relief in the monotony of a straight roofline. If dormers are needed for the expandable attic, they should be included in the construction program.

Choice of Materials

The materials used in a house can vary a great deal, and the savings can be effected in their choice. The following suggestions should be considered:

304696 O—55——14

1. The use of concrete blocks for foundation walls should be balanced against the use of poured concrete or other masonary materials. These costs may vary by areas. Get an opinion from a reputable contractor.

2. The use of precast blocks for chimneys may be considered if they are available. These blocks are made to take flue linings of varied sizes and are laid up more rapidly than brick. The use of prefabricated lightweight chimneys that require no masonry may also save money.

3. Dimension material varies somewhat in cost by species. Use the better grades for joists and rafters and the lower-cost grades for studs. Do not use grades, the use of which involves cutting and selection, or the saving will be dissipated by increased labor costs. Do not use better grades of lumber than are actually needed. Consult a reliable authority.

4. The cost of exterior finish may vary considerably. While more pleasing in appearance, the use of wide, thick-butt siding, for example, may cost 50 percent more than narrower types. The cost of ap-application, however, may slightly favor the wider siding. Rust-resistant nails should be used for siding, and they are well worth the additional cost. The species should be considered not only on the basis of original cost but also with respect to paintability.

5. The choice of interior coverage should be considered. While dry-wall construction may be lower in cost per square foot, it requires decorating before it can be considered complete; whereas plaster walls do not require immediate decorating. These costs vary by areas, depending much on the availability of the various trades.

6. The choice of flooring, trim, and other interior finish should be carefully studied. Lower cost trim species are ordinarily painted, while oak and birch, for example, may be given a coat of sealer and perform satisfactorily. Use standard moldings and stock window sizes to decrease the cost. The same advice may be applied to the selection of cabinets. Custom-built material of this type is usually much higher in cost.

Construction

Methods of framing vary only slightly throughout the country. The following suggestions may save some labor and materials:

1. Horizontal assembly of full-wall sections, even to application of diagonal bracing and sheathing, is used by many contractors to advantage. These sections are raised in place and fastened to the floor system.

2. Where a gypsum-board dry-wall finish is used, many contractors are employing the horizontal method of application. This brings the taped joint below eye level, and large room-size sheets may be used. The vertical joints may be made at window or door openings.

3. During construction, the advantages of a simple plan and the selection of an uncomplicated roof will be obvious. There will be less waste by cutting joists and rafters, and erection will be more rapid than on a house where intricate construction is involved.

PROTECTION AND CARE OF MATERIAL ON THE BUILDING SITE

The protection of building material on the site, when it arrives, and its storage before use is an important phase of the construction of a house. If materials are stored before use without protection in inclement weather, damage may be caused that could be reflected in more troublesome maintenance and owner dissatisfaction.

While it is not always possible under present-day construction conditions, material should preferably be delivered to the site just before it is to be used. This is especially true of exterior window and door frames and exterior trim materials. Interior finishing materials currently required may be stored in the house after the roof is on.

Protection of Framing Materials

In normal stages of construction, after excavation is complete, the dimension lumber and sheathing materials are delivered on the job. After delivery it is the builder's responsibility to provide adequate protection to these materials against wetting and other damage. Structural and framing materials in place on a house before it is enclosed may be subject to wetting during a storm, but the wetting is mostly on the exposed surfaces and can dry out quickly in subsequent dry weather without causing important damage. Lumber stored in close piles, however, may soak up considerable water; redrying will be very slow, and conditions will be favorable for stain and decay. Therefore the piles should be placed on skids raised at least 6 inches off the ground and should be covered with canvas or waterproof paper laid to shed water. Fiberboard and gypsum sheathing, being somewhat fragile, need protection against mechanical damage as well as against wetting.

After the framing and the wall and roof sheathing have been completed, the exterior roof trim, such as the cornice and rake finish, is installed. During this period the shingles may have been delivered, and in the case of asphalt shingles they should be stored so that bundles lie flat without bending. Curved or buckled shingles often result in a roof of poor appearance. Wood shingles can be stored without protection from rain.

Window and Door Frames

Window and door frames are usually the next items to be installed after the roofing. If the frames are delivered before they can be placed, they should be given a prime coat of paint and should be sheltered before they are used. Put them under cover! Good frames are costly items, and exposure to the elements may nullify their good construction.

Siding and Lath

Siding materials can be protected by storing them temporarily in the house or garage. Place them to one side in a room so that they will not be stepped on and split. Wood siding is bundled with the

pieces face to face so as to protect the surfaces from dirt and some mechanical damage.

The insulation and rock lath that is to be applied on the interior, should be stored in the interior of the house. This material is usually not used until the electrical, heating, and plumbing trades have completed the roughing-in parts of their work.

Plastering in Cold Weather

During cold weather in cold climates, the heating unit should be ready for operation before plastering is begun. Heat should be used in the winter to prevent freezing, and even during the cooler months so that the plaster can dry more readily. Windows should be opened slightly to rid the building of moisture.

Interior Finish

It frequently happens, shortly after an owner moves into a new house, that evidence of shrinkage appears in the exposed woodwork, such as cracks between boards in wood floors, openings in mitered joints of trim, warping of doors, and creaking of stair treads. Any or all of these disfiguring and objectionable conditions may occur in a new house, particularly those being finished in the spring, summer, and fall when no heat is provided in the house.

Flooring manufacturers generally kiln-dry the flooring before it is shipped. In examining wood floors with objectionable cracks between the boards, it has been found that in most cases the material had picked up moisture after manufacture and before it was laid, that caused it to swell. As such material redries under the exposure conditions in the house, it shrinks and the boards separate. Some of the moisture pickup may occur before the flooring is delivered to the building, but often the pickup occurs after delivery and before laying.

In an unheated building under construction, the relative humidity will average much higher than that in an occupied house. Under such conditions the flooring and finish tend to absorb moisture. To prevent moisture pickup at the building and to dry out any excess moisture picked up between time of manufacture and delivery, it is necessary that the humidity be reduced below that commonly present in an unheated house. This may be accomplished by maintaining a temperature above the outdoor temperature.

Before any flooring or interior finish is delivered, the outside doors and windows should be hung and the heating plant installed to supply heat. For warm-weather control, when the workmen leave at night, the thermostat should be set to maintain a temperature of 15° F. above the average outdoor temperature. In the morning when the workmen return to work, the thermostat can be set back so that the burner will not operate. This procedure should be followed even during very warm summer weather. During cold weather the temperature should be held at about 60° F.

When flooring is delivered, the bundles should be opened and the boards spread about so that they can dry out evenly. To allow time

for drying of moisture picked up before delivery, hold the stock for several days before laying. After the building is completed, there is less need for heat, but unoccupied houses, new or old, should not be allowed to stand without some heat during the winter. A temperature of about 15° F. above outdoor temperature and above freezing at all times will keep the woodwork and other parts of the house from being affected by dampness or frost.

The protective measures suggested for flooring apply to all other woodwork. The added cost of fuel is justified on the basis of the improved appearance and owner satisfaction. In most cases an average-size six-room house can be heated as suggested during 6 weeks of warm weather for the equivalent of 30 to 50 gallons of oil.

MAINTENANCE AND REPAIR

A house that is well constructed, with adequate attention to construction details and to the choice of materials as brought out in the body of this publication, will need far less maintenance than one that is not well built. The timeworn phrase, "It's not the first cost, it's the upkeep," certainly applies to a house that requires more maintenance than its well-constructed neighbor. It is indeed discouraging to the homeowner to begin repair and maintenance almost before he has moved in! An extra $10 used for rust-resistant nails on the siding, for example, may save $100 by requiring less frequent painting.

Inasmuch as there are good publications (*34*) available on the methods of repairing and caring for the house, this section will deal principally with ways of foreseeing possible future trouble spots. A small amount of initial attention will often prevent a major repair bill.

Basement

The basement may sometimes be damp for several months after the house has been completed. In most cases this moisture comes from masonry walls and floors and will progressively disappear. In cases of persistent dampness, however, the owner should check various areas in order to eliminate any possibilities for water entry.

The following areas may be the source for some of the trouble caused by the entry of moisture:

1. Check the drainage at the downspouts. The final grade around the house should be away from the building, and a splash block should be provided to drain the water away from the foundation wall.
2. Some settling of the soil may occur at the foundation wall and form water pockets. These areas should be filled and tamped so that surface water can drain away.
3. Some leaking may occur in a poured concrete wall at the tie wires. These usually seal themselves, but larger holes should be filled with a cement mortar. Clean and slightly dampen the area first for good adhesion.
4. Concrete-block or other masonry walls exposed above grade often show dampness on the interior after a prolonged rainy spell. There

are concrete paints on the market that increase the resistance to moisture seepage. Transparent liquid waterproofing materials may also be used on the exterior walls. (See Foundation Walls and Piers, p. 9, for treatment of walls below grade.)

5. There should be at least a 6-inch clearance between the bottom of the siding and the finish grade to prevent moisture absorption. Shrubs and foundation plantings should also be kept away from the wall to improve circulation and drying. In lawn sprinkling, do not allow the water to spray against the walls of the house.

6. Check areas between the foundation wall and the sill. Any openings should be filled with a cement mixture or a calking compound. This filling will decrease heat loss and also prevent entry of insects into the basement.

7. Dampness in the basement in the early summer months is often augmented by opening the windows for ventilation during the day. This will allow warm, moisture-laden outside air to enter. The lower temperature of the basement will cool the incoming air and frequently cause condensation to collect and drip from cold-water pipes and also collect on colder parts of the masonry walls and floors. To air out the basement, open the windows during the night.

In aggravated cases heating the basement to raise the temperature 5 to 10 degrees, with the windows closed, has proved helpful. Heating lowers the humidity, warms the cold masonry, and dries up the moisture. On cool days no heat is required, and the windows may be opened. As the summer advances and the masonry warms up, condensation will not usually occur on the walls but may occur on the cold-water pipes. Wrapping such pipes has proved helpful in reducing condensation and drip.

A desiccant such as calcium chloride is sometimes used to lower the humidity in basements. Mechanicals dehumidifiers are also available in a variety of sizes. Such units are generally enclosed in a cabinet and are operated by electricity. The doors and windows should be closed at all times during dehumidification; otherwise the moisture in the entering air will continually replace the moisture extracted by the desiccant or dehumidifier.

Crawl-Space Area

The crawl-space area should be checked as follows:

1. If the house is located in a termite area, be sure to make annual inspections, preferably in the late spring or early summer, for termite activity or damage. These inspections are a must if the house or a part of the house is built over a crawl space. Termite tubes on the walls or piers are an indication of their activity. A well-constructed house will have a termite shield under the wood sill with a 2-inch extension on the interior. Examine the shield for proper projection, and also any cracks in the foundation walls, as these cracks form good channels for termites to enter (see Protection Against Decay and Termites, p. 194).

2. While in this crawl space, it is well to check the area for any decay that may be occurring in the girders or joists as well as for signs of

condensation on wood members of the floor framing. Use a penknife to test questionable areas for rot and decay.

3. If the crawl space seems damp and the ground moist, it may be due to lack of proper ventilation. The crawl-space ventilators should be of adequate size and should be so located that there is cross circulation. The use of a soil cover, 55-pound saturated felt or heavier, on the ground of the crawl space will prevent much of the soil moisture from entering the area (see Ventilation, p. 110, for size of ventilators and soil-cover protection).

Roof and Attic

The roof and attic should be inspected in the following respects:

1. If there are a few humps on asphalt shingle tabs, they most likely are due to nails that have not been driven into sound wood. Remove such nails and replace with others driven into sound wood. There may be a line of buckled shingles along the roof. This ordinarily is caused by applying the shingles to roof boards that are not only partially dried out but that are also too wide. The shrinkage of the wood in the wide boards between the nails causes these humps by buckling the shingles. Time and hot weather tend to reduce this condition.

2. A dirt streak down the gable end of a house is often caused by rain entering the rake molding from shingles that have insufficient projection. A cant strip would ordinarily have prevented this (see p. 61 for proper installation).

3. In winters of heavy snows, ice dams may form at the eaves, and these often result in water entering the cornice and walls of the house. The immediate remedy is to remove the snow on the roof for a short distance above the gutters and if necessary in the valleys. Additional insulation between heated rooms and roof space and increased ventilation in the overhanging eaves to lower the general attic temperature will help to decrease the melting of snow on the roof and thus minimize formation of ice at the gutters and in the valleys. Deep snow in valleys also sometimes forms ice dams that cause water to back up under shingles and valley flashing (see Roof Coverings, p. 62).

4. Roof leaks are often caused by improper flashing at the valley, ridge, or around the chimney. Observe these areas during a rainy spell to discover the source. Water may travel many feet from the point of entry before it drips off the roof members.

5. The attic ventilators serve two important purposes; that of summer ventilation as a means of lowering the attic temperature to improve comfort conditions in the rooms below, and that of winter ventilation to remove moisture that may work through the ceiling and condense in the attic space. The ventilators should be open both winter and summer.

In order to check for sufficient ventilating area during cold weather, examine the attic after a prolonged cold period. If nails protruding from the roof are heavily coated with frost, it is evident that ventilation is not sufficient. Frost may also collect on the roof sheathing, first appearing near the eaves on the north side of the roof. Increase the size of the ventilators or place additional ones in the protected underside of the cornice. This will improve air movement and circulation. (See Ventilation, p. 110, for proper size and location.)

Exterior Walls

One of the major problems of maintenance of a wood-covered house is the exterior paint finish. There are a number of reasons for paint failures, many of them known, others not as yet thoroughly investigated. One of the major causes of paint failure is moisture in its various forms. Quality of paint and method of application are other reasons. Correct methods of application, types of paint, and the problems encountered are covered under Painting and Finishing, page 180. Other phases of the exterior maintenance that the owner may encounter in his house are as follows:

1. If steel nails have been used for the application of the siding, disfiguring rust spots may occur at the nailhead. Such rust spots are quite common where nails are driven flush with the heads exposed. Spotting is somewhat less apparent where steel nails have been set and puttied. Similarly, the spotting may be minimized, in the case of flush nailing, by setting the nailhead below the surface and puttying. The puttying should be preceded by a priming coat. Take care of these nails just before the house requires repainting.

2. Brick and other types of masonry are not always waterproof, and continued rains may result in damp interior walls or wet spots where water has worked through. If this trouble persists, it may be well to use a waterproof coating over the exposed surfaces. Transparent coatings can be obtained for this purpose.

3. Calking is usually required where a change in materials occurs, such as that of wood siding abutting against brick chimneys or walls. The wood should always have a prime coating of paint for proper adhesion of the calking compound. Calking guns with cartridges can be obtained and are the best means of waterproofing these joints.

4. Rainwater flowing down over wood siding may work through butt and end joints and sometimes may work up under the butt edge by capillarity. Setting the butt and end joints in white lead is an oldtime custom that is very effective in preventing water from entering. Painting under the butt edges at the lap adds mechanical resistance to water ingress. However, moisture changes in the siding cause some swelling and shrinking that may break the paint film. Treating the siding with a water repellent before it is applied is an effective method of reducing capillary action. For houses already built the water repellent could be applied under the butt edges of bevel siding or along the joints of drop siding and at all vertical joints. Excess repellent on the face of painted surfaces should be wiped off.

Interior

Plaster.—The following points in plaster maintenance are worthy of attention:

1. In a newly constructed house, a few small plaster cracks may develop during or after the first heating season. These cracks are usually due to drying and shrinking of the structural members. For this reason, it is advisable to wait for a part of the heating season before painting plaster. These cracks can then be filled before painting is begun.

2. Because of the curing period ordinarily required for plastered walls, it is not advisable to apply oil-base paints until at least 60 days after plastering is completed. Water-mix or resin-base paints may be applied without the necessity of an aging period.

3. Large plaster cracks often indicate a structural weakness in the framing. One of the common areas that may need correction is around a basement stairway. Framing may not be adequate for the loads of the walls and ceilings. In such cases the use of an additional post and pedestal may be required to correct this fault. Inadequate framing around fireplaces and chimney openings, and joists that are not doubled under partitions, are other common sources of weakness. (See Floor Framing, p. 22, for recommended methods of framing.)

Moisture on windows.—Points to be noted with respect to moisture on windows are as follows:

1. During cold weather, condensation, and in cold climates, frost will collect on the inner face of single-glazed windows. Water from the condensation or melting frost runs down the glass and soaks into the wood sash to cause stain, decay, and paint failure. The water may rust steel sash. To prevent such condensation, the window should be provided with a storm sash. Double glazing will also minimize this condensation.

2. Occasionally, in very cold weather, frost may form on the inner surfaces of the storm windows. This may be caused by (*a*) loose-fitting window sash that allows moisture to enter the space between the window and storm sash, and (*b*) high relative humidity in the living quarters. Generally, the condensation on storm sash does not create a maintenance problem, but it may be a nuisance. Weather-stripping the inner sash offers increased resistance to moisture flow and may prevent this condensation. Lower relative humidities in the house are also helpful.

Moisture on doors.—Condensation may collect on single exterior doors during severe cold periods for the same reasons as described for windows. Here again, the water may cause damage to the door and to the finish. Storm doors offer the most practical means of preventing or minimizing such condensation. The addition of storm doors will also decrease the warping of the exterior doors.

Floor joints.—A finish floor that has been improperly laid is a source of trouble for the housewife. This flooring may have been laid with varying moisture contents in the boards or at too high a moisture content. Cracks or openings in the floor appear during the heating season as the flooring dries out. If the floor has a few large cracks, one expedient is to fit matching strips of wood between the flooring strips and to glue them in place. In severe cases, it may be necessary to replace sections of the floor or to refloor the entire house. Another method would be to cover the existing flooring with a thin flooring $\frac{5}{16}$ or $\frac{3}{8}$ inch thick. This would require removal of the base shoe, fitting the thin flooring around door jambs, and perhaps sawing of the door bottoms. (For proper methods of laying floors to prevent open joints see Floor Coverings, p. 128.)

Unheated rooms.—In the interest of economy of fuel consumption and for personal reasons, many homeowners close unused bedrooms and leave them unheated during the winter months. These factors

of low temperatures and lack of heat unfortunately are conducive to trouble from condensation. Certain corrective or protective measures can be used to prevent damage and subsequent maintenance expense, as follows:

1. Do not operate humidifiers or use any other means of intentionally increasing humidity in heated parts of the house.
2. Open the windows of unheated rooms during bright sunny days for several hours for ventilation. Ventilation will help to draw moisture out of the rooms.
3. Install storm sash on all windows, including those in unheated rooms. Such sash will materially reduce heat loss from both heated and unheated rooms and will minimize the condensation on the inner glass surfaces.

LITERATURE CITED

(*1*) AMERICAN SOCIETY OF HEATING AND VENTILATING ENGINEERS.
1948. HEATING, VENTILATION, AIR-CONDITIONING GUIDE. 1,280 pp., illus.

(*2*) BARITHER, H. D. and LENDRUM, J. T.
1948. CONCRETE FLOORS FOR BASEMENTLESS HOUSES. Ill. Univ. Small Homes Council Cir. Ser. F4.3, 4 pp., illus.

(*3*) BEACH, DAVID M.
1937. CONSTRUCTION OF PRIVATE DRIVEWAYS. U. S. Dept. Agri. Misc. Pub. 272, 30 pp., illus.

(*4*) BLEW, J. OSCAR.
1953. WOOD PRESERVATIVES. U. S. Forest Products Laboratory Rpt. D149, 12 pp. [Processed.]

(*5*) BROOKS, JEFFERSON D.
1950. LOW-COST WIRING METHODS AND MATERIALS FOR HOMES. Housing and Home Finance Agency Tech. Bull. 13, 31 pp., illus.

(*6*) BROWNE, F. L.
1927. SOME CAUSES OF BLISTERING AND PEELING OF PAINT ON HOUSE SIDING. Amer. Paint and Varnish Mfrs. Assoc., Sci. Sec. Cir. 317, 17 pp., illus.

(*7*) ———
1947. WOOD PRODUCTS AND PAINT DURABILITY. U. S. Dept. Agr. Misc. Pub. 629, 10 pp., illus.

(*8*) ———
1949. WATER-REPELLENT PRESERVATIVES FOR WOOD. Arch. Record 105 (3): 131–132, 174.

(*9*) ———
1950. NATURAL WOOD FINISHES FOR HOUSE EXTERIORS. U. S. Forest Products Laboratory Rept. R1908, 9 pp. [Processed.]

(*10*) ———
1952. PRESERVATIVE TREATMENT OF WINDOW SASH AND OTHER MILLWORK. U. S. Forest Products Laboratory Rpt. R919, 12 pp. [Processed.]

(*11*) ———
1953. THE PRESERVATIVE TREATMENT AND STAINING OF SHINGLES. U. S. Forest Products Laboratory Rpt. R761, 8 pp. [Processed.]

(*12*) ———
1953. WHEN AND HOW TO PAINT HOMES AND FARM BUILDINGS. U. S. Forest Products Laboratory Rpt. R962, 13 pp. [Processed.]

(*13*) ——— and RIETZ, R. C.
1953. EXUDATION OF PITCH AND OILS IN WOOD. U. S. Forest Products Laboratory Rpt. 1735, 11 pp., illus. [Processed.]

(*14*) DILLER, JESSE D.
1950. REDUCTION OF DECAY HAZARD IN BASEMENTLESS HOUSES ON WET SITES. U. S. Dept. Agr. Forest Pathology Special Release 30, 4 pp., illus.

(15) DUNLAP, M. E.
1949. CONDENSATION CONTROL IN DWELLING CONSTRUCTION. Housing and Home Finance Agency. 73 pp., illus.

(16) FEDERAL HOUSING ADMINISTRATION.
1949. A STANDARD FOR TESTING SHEATHING MATERIALS FOR RESISTANCE TO RACKING. Underwriting Div. Tech. Cir. 12, 2 pp.

(17) ———
1950. TABLES OF MAXIMUM ALLOWABLE SPANS FOR WOOD FLOOR JOISTS, CEILING JOISTS, RAFTERS, IN RESIDENTIAL CONSTRUCTION. Federal Housing Admin. Pub. 2550, 54 pp., illus

(18) ———
1951. MINIMUM PROPERTY REQUIREMENTS FOR PROPERTIES OF ONE OR TWO LIVING UNITS. Issued regionally, with varying requirements.

(19) FEDERAL SECURITY AGENCY.
1940. LIGHT FRAME HOUSE CONSTRUCTION—TECHNICAL INFORMATION FOR USE OF APPRENTICE AND JOURNEYMEN CARPENTERS. U. S. Office of Education, Vocational Div. Bull. 45, 214 pp., illus.

(20) GENERAL SERVICES ADMINISTRATION.
1950. WOOD PRESERVATIVE: RECOMMENDED TREATING PRACTICE. Federal Specification TT-W-00571d, 11 pp.

(21) GOODYEAR, MARGARET R., IWIG, DOROTHY J., MILES, F. D., WORD, GLADYS J., and WEAVER, VIRGINIA H.
1945. PLANNING THE KITCHEN. Ill. Univ. Small Homes Council Cir. Ser. C5-3, 8 pp., illus.

(22) GRONDAL, BROR L., and WOODBRIDGE, W. W.
1947. HANDBOOK OF RED CEDAR SHINGLES. Ed. 6, 100 pp., illus. Red Cedar Shingle Bureau. Seattle.

(23) HELPHENSTINE, R. K., Jr.
1938. SELECTION, INSTALLATION, FINISH, AND MAINTENANCE OF WOOD FLOORS. U. S. Dept. Agr. Cir. 489, 26 pp., illus.

(24) HEYER, O. C., and WILSON, T. R. C.
1947. TECHNIQUE OF HOUSE NAILING. Housing and Home Finance Agency. 53 pp., illus.

(25) HOUSING AND HOME FINANCE AGENCY.
1948. ATTIC CONDENSATION IN TIGHTLY BUILT HOMES. Tech. Bull. 6, 50 pp. [Processed.]

(26) ———
1948. WATER PENETRATION AND VAPOR PERMEABILITY OF SHEET MATERIALS AS RELATED TO CONDENSATION CONTROL IN DWELLING CONSTRUCTION. Tech. Bull., 5, 65 pp. [Processed.]

(27) HUMPHREY, C. J. and SIGGERS, P. V.
1933. TEMPERATURE RELATIONS OF WOOD-DESTROYING FUNGI. Jour. Agr. Res. 47 (12) : 997-1,008.

(28) KONZO, S., LENDRUM, J. T., HINCHCLIFF, K. H., and HARRIS, W. S.
1945. CHIMNEYS AND FIREPLACES. Ill. Univ. Small Homes Council Cir. Ser. F7.0, 8 pp., illus.

(29) KRAEHENBUEHL, J. O., HELM, M. S., and SCHIEK, W. H.
1945. PLANNING FOR ELECTRICITY. Ill. Univ. Small Homes Council Cir. Ser. G4.0, 8 pp., illus.

(30) LENDRUM, J. T., KONZO, S., KRATZ, A. P., and HARRIS, W. W.
1946. INSULATION IN THE HOME. Ill. Univ. Small Homes Council Cir. Ser. F6.0, 7 pp., illus.

(31) MCNAUGHTON, G. C., and VAN KLEECK, A.
1944. FIRE-TEST METHODS USED IN RESEARCH AT THE FOREST PRODUCTS LABORATORY. U. S. Forest Products Laboratory Rpt. R1443, 16 pp., illus. [Processed.]

(32) NATIONAL WOODWORK MANUFACTURERS' ASSOCIATION.
1951. STOCK PONDEROSA PINE AND HARDWOOD VENEERED DOORS. 11 pp., illus.

(33) ———
1951. MODULAR STANDARD WOOD WINDOWS. Nat. Woodwork Mfrs. Assn. Manual WSS-45, 11 pp., illus. (Rev.)

(34) PHELAN, VINCENT D.
1931. CARE AND REPAIR OF THE HOUSE. U. S. Dept. of Commerce. Building and Housing Pub. BH15, 121 pp., illus.

(35) RAMSEY, G. C., and SLEEPER, H. R.
1951. ARCHITECTURAL GRAPHIC STANDARDS. 233 pp., illus. New York.

(36) RICHTER, H. P.
1943. WIRING SIMPLIFIED. Ed. 15, 122 pp., illus. Chicago.

(37) ROWLEY, F. B.
1947. MOISTURE CONDENSATION. Ill. Univ. Small Homes Council Cir. Ser. F6.2, 8 pp., illus.

(38) SCHUMAN, L.
1949. INSULATION OF CONCRETE FLOORS IN DWELLINGS. Housing and Home Finance Agency Tech. Bull. 8, 245 pp., illus. [Processed.]

(39) SENNER, ARTHUR H., and MILLER, THOMAS A. H.
1941. FIREPLACES AND CHIMNEYS. U. S. Dept. Agr. Farmers' Bull. 1889, 52 pp., illus.

(40) SNYDER, T. E.
1950. CONTROL OF NONSUBTERRANEAN TERMITES. U. S. Dept. Agr. Farmers' Bull. 2018, 16 pp., illus.

(41) SWEET, C. V., and JOHNSON, R. P. A.
1936. SELECTION OF LUMBER FOR FARM AND HOME BUILDING. U. S. Dept. Agr. Farmers' Bull. 1756, 45 pp., illus.

(42) TEESDALE, L. V.
1947. REMEDIAL MEASURES FOR BUILDING CONDENSATION DIFFICULTIES. U. S. Forest Products Laboratory Rpt. R1710, 14 pp., illus. [Processed.]

(43) ———
1949. THERMAL INSULATION MADE OF WOOD-BASE MATERIALS. U. S. Forest Products Laboratory Rpt. R1740, 40 pp., illus. [Processed.]

(44) ———
1953. CONDENSATION PROBLEMS IN MODERN BUILDINGS. U. S. Forest Products Laboratory Rpt. R1196, 12 pp., illus. [Processed.]

(45) ——— and MATHEWSON, J. S.
1930. PREVENTING CRACKS IN NEW WOOD FLOORS. U. S. Dept. Agr. Leaflet 56, 6 pp., illus. (Rev. 1952.)

(46) TIMBER ENGINEERING COMPANY.
1948. TYPICAL DESIGN OF TIMBER STRUCTURES—A REFERENCE FOR USE OF ARCHITECTS AND ENGINEERS. Nat. Lbr. Mfrs. Assn. 114 pp., illus.

(47) TRUAX, T. R.
1950. MAKING WOOD FIRE RETARDANT. U. S. Forest Products Laboratory Rpt. D1760. 8 pp. [Processed.]

(48) ——— HARRISON, C. A., and BAECHLER, R. H.
1935. EXPERIMENTS IN FIREPROOFING WOOD. U. S. Forest Products Laboratory Rpt. R1118, 7 pp., illus. [Processed.]

(49) U. S. DEPARTMENT OF AGRICULTURE.
1949. PREVENTING DAMAGE TO BUILDINGS BY SUBTERRANEAN TERMITES, AND THEIR CONTROL. U. S. Dept. Agr. Farmers' Bull. 1911, 38 pp., illus.

(50) ———
1951. DECAY AND TERMITE DAMAGE IN HOUSES. U. S. Dept. Agr. Farmers' Bull. 1993, 26 pp., illus.

(51) U. S. DEPARTMENT OF COMMERCE, NATIONAL BUREAU OF STANDARDS.
1949. STRUCTURAL FIBER INSULATING BOARD. Commercial Standard CS 42–49, 17 pp., illus.

(52) ———
1953. AMERICAN LUMBER STANDARDS FOR SOFTWOOD LUMBER. Business and Defense Services Admin. Simplified Practice Recommendation 16–53, 26 pp., illus.

(53) U. S. FOREST PRODUCTS LABORATORY.
1933. COATINGS FOR MINIMIZING CHANGES IN THE MOISTURE CONTENT OF WOOD. Tech. Note 181, 5 pp. [Processed.]

(54) ———
1952. PREVENTION AND CONTROL OF DECAY IN DWELLINGS. Tech. Note 251, 6 pp., illus. [Processed.]

(55) ———
1952. WEATHERING AND DECAY. Tech. Note 221, 2 pp. [Processed.]

(56) ———
1953. METHODS OF APPLYING WOOD PRESERVATIVES. Forest Products Laboratory Rpt. D154, 28 pp. [Processed.]

(57) U. S. FOREST PRODUCTS LABORATORY.
1955. WOOD HANDBOOK. U. S. Dept. Agr. Agriculture Handbook No. 72. (In press.)
(58) VAN KLEECK, ARTHUR.
1953. FIRE-RETARDING COATINGS. U. S. Forest Products Laboratory Rpt. R1280, 11 pp. [Processed.]
(59) ——— and MARTIN, T. J.
1950. EVALUATION OF FLAME-SPREAD RESISTANCE OF FIBER INSULATION BOARDS. U. S. Forest Products Laboratory Rpt. D1756, 12 pp., illus. [Processed.]
(60) VERRALL, A. F.
1949. DECAY PROTECTION FOR EXTERIOR WOODWORK. Southern Lumberman 178 (June 15) : 74–80, illus.
(61) ———
1951. PERMANENCE FOR WOOD SIDING. U. S. Dept. Agr. Forest Pathology Special Release 36, 7 pp., illus.
(62) ———
1952. CONTROL OF WOOD DECAY IN BUILDINGS. Agr. Eng. 33 (4) : 217–219.
(63) WORTH, WILLARD J. and HARRELL, RAYMOND H.
1952. ROOF TRUSS DESIGN FOR STANDARD AND SPECIAL CONDITIONS. Ill. Univ. Small Homes Council unnumbered pub. 28 pp., illus.

GLOSSARY OF HOUSING TERMS

Air-dried lumber. Lumber that has been piled in yards or sheds for any length of time. For the United States as a whole the minimum moisture content of thoroughly air-dried lumber is 12 to 15 percent and the average is somewhat higher.

Airway. A space between roof insulation and roof boards for movement of air.

Alligatoring. Coarse checking pattern characterized by a slipping of the new coating over the old coating to the extent that the old coating can be seen through the fissures.

Anchor bolts. Bolts to secure a wooden sill to concrete or masonry floor or wall.

Apron. The flat member of the inside trim of a window placed against the wall immediately beneath the stool.

Areaway. An open subsurface space adjacent to a building used to admit light or air or as a means of access to a basement or cellar.

Asphalt. Most native asphalt is a residue from evaporated petroleum. It is insoluble in water but is soluble in gasoline and melts when heated. Used widely in building for waterproofing roof coverings of many types, exterior wall coverings, flooring tile, and the like.

Astragal. A molding, attached to one of a pair of swinging doors, against which the other door strikes.

Attic ventilators. In home building, usually openings in gables or ventilators in the roof. Also, mechanical devices to force ventilation by the use of power-driven fans. *See* also Louver.

Backband. Molding used on the side of a door or window casing for ornamentation or to increase the width of the trim.

Backfill. The replacement of excavated earth into a pit or trench or against a structure.

Balusters. Small spindles or members forming the main part of a railing for stairway or balcony, fastened between a bottom and top rail.

Base or baseboard. A board placed against the wall around a room next to the floor to finish properly between floor and plaster.

Base molding. Molding used to trim the upper edge of interior baseboard.

Base shoe. Molding used next to the floor on interior baseboard. Sometimes called a carpet strip.

Batten. Narrow strips of wood or metal used to cover joints.

Batter board. One of a pair of horizontal boards nailed to posts set at the corners of an excavation, used to indicate the desired level, also as a fastening for stretched strings to indicate outlines of foundation walls.

Bay window. Any window space projecting outward from the walls of a building, either square or polygonal in plan.

Beam. A structural member transversely supporting a load.

Bearing partition. A partition that supports any vertical load in addition to its own weight.

Bearing wall. A wall that supports any vertical load in addition to its own weight.

Bed molding. A molding in an angle, as between the overhanging cornice, or eaves, of a building and the side walls.

Blinds (shutters). Light wood sections in the form of doors to close over windows to shut out light, give protection, or add temporary insulation. Commonly used now for ornamental purposes, in which case they are fastened rigidly to the building.

Blind-nailing. Nailing in such a way that the nailheads are not visible on the face of the work.

Blind stop. A rectangular molding, usually ¾ by 1⅜ inches or more, used in the assembly of a window frame.

Blue stain. A bluish or grayish discoloration of the sapwood caused by the growth of certain moldlike fungi on the surface and in the interior of the piece, made possible by the same conditions that favor the growth of other fungi.

Bodied linseed oil. Linseed oil that has been thickened in viscosity by suitable processing with heat or chemicals. Bodied oils are obtainable in a great range in viscosity from a little greater than that of raw oil to just short of a jellied condition.

Boiled linseed oil. Linseed oil in which enough lead, manganese, or cobalt salts have been incorporated to make the oil harden more rapidly when spread in thin coatings.

Bolster. A short horizontal timber resting on the top of a column for the support of beams or girders.

Boston ridge. A method of applying asphalt or wood shingles as a finish at the ridge or hips of a roof.

Brace. An inclined piece of framing lumber used to complete a triangle, and thereby to stiffen a structure.

Brick veneer. A facing of brick laid against frame or tile wall construction.

Bridging. Small wood or metal members that are inserted in a diagonal position between the floor joists to act both as tension and compression members for the purpose of bracing the joists and spreading the action of loads.

Buck. Often used in reference to rough frame opening members. Door bucks used in reference to metal door frame.

Built-up roof. A roofing composed of three to five layers of rag felt or jute saturated with coal tar, pitch, or asphalt. The top is finished with crushed slag or gravel. Generally used on flat or low-pitched roofs.

Butt joint. The junction where the ends of two timbers or other members meet in a square-cut joint.

Cabinet. A shop- or job-built unit for kitchens. Cabinets often include combinations of drawers, doors, and the like.

Cant strip. A wedge or trinagular-shaped piece of lumber used at gable ends under shingles or at the junction of the house and a flat deck under the roofing.

Cap. The upper member of a column, pilaster, door cornice, molding, and the like.

Casing. Wide molding of various widths and thicknesses used to trim door and window openings.

Casement frames and sash. Frames of wood or metal enclosing part or all of the sash, which may be opened by means of hinges affixed to the vertical edges.

Cement, Keene's. The whitest finish plaster obtainable that produces a wall of extreme durability. Because of its density it excels for a wainscoting plaster for bathrooms and kitchens and is also used extensively for the finish coat in auditoriums, public buildings, and other places where walls will be subjected to unusually hard wear or abuse.

Checking. Fissures that appear with age in many exterior paint coatings, at first superficial, but which in time may penetrate entirely through the coating.

Checkrails. Meeting rails sufficiently thicker than a window to fill the opening between the top and bottom sash made by the parting stop in the frame. They are usually beveled.

Collar beam. A beam connecting pairs of opposite roof rafters above the attic floor.

Column. In architecture: A perpendicular supporting member, circular or rectangular in section, usually consisting of a base, shaft, and capital. In engineering: A structural compression member, usually vertical, supporting loads acting on or near and in the direction of its longitudinal axis.

Combination doors. Combination doors have an inside removable section so that the same frame serves for both summer and winter protective devices. A screen is inserted in warm weather to make a screen door, and a glazed or a glazed-and-wood-paneled section in winter to make a storm door. The inconvenience of handling a different door in each season is eliminated.

Concrete, plain. Concrete without reinforcement, or reinforced only for shrinkage or temperature changes.

Condensation. In a building: Beads or drops of water, and frequently frost in extremely cold weather, that accumulate on the inside of the exterior covering of a building when warm, moisture-laden air from the interior reaches a point where the temperature no longer permits the air to sustain the moisture it holds. Use of louvers or attic ventilators will reduce moisture condensation in attics.

Conduit, electrical. A pipe, usually metal, in which wire is installed.

Construction, dry-wall. A type of construction in which the interior wall finish is applied in a dry condition, generally in the form of sheet materials, as contrasted to plaster.

Construction, frame. A type of construction in which the structural parts are of wood or dependent upon a wood frame for support. In codes, if brick or other incombustible material is applied to the exterior walls, the classification of this type of construction is usually unchanged.

Coped joint. See Scribing.

Corbel out. To build out one or more courses of brick or stone from the face of a wall, to form a support for timbers.

Corner bead. A strip of formed galvanized iron, sometimes combined with a strip of metal lath, placed on corners before plastering to reinforce them. Also, a strip of wood finish three-quarters-round or angular placed over a plastered corner for protection.

Corner boards. Used as trim for the external corners of a house or other frame structure against which the ends of the siding are finished.

Corner braces. Diagonal braces let into studs to reinforce corners of frame structures.

Cornerite. Metal-mesh lath cut into strips and bent to a right angle. Used in interior corners of walls and ceilings on lath to prevent cracks in plastering.

Cornice. A decorative element made up of molded members usually placed at or near the top of an exterior or interior wall.

Cornice return. That portion of the cornice that returns on the gable end of a house.

Counterflashing. A flashing usually used on chimneys at the roofline to cover shingle flashing and to prevent moisture entry.

Cove molding. A three-sided molding with concave face used wherever small angles are to be covered.

Crawl space. A shallow space below the living quarters of a house. It is generally not excavated or paved and is often enclosed for appearance by a skirting or facing material.

Cricket. A small drainage diverting roof structure of single or double slope placed at the junction of larger surfaces that meet at an angle.

Crown molding. A molding used on cornice or wherever a large angle is to be covered.

d. See Penny.

Dado. A rectangular groove in a board or plank. In interior decoration, a special type of wall treatment.

Decay. Disintegration of wood or other substance through the action of fungi.

Deck paint. An enamel with a high degree of resistance to mechanical wear, designed for use on such surfaces as porch floors.

Density. The mass of substance in a unit volume. When expressed in the metric system, it is numerically equal to the specific gravity of the same substance.

Dimension. See Lumber, dimension.

Direct nailing. To nail perpendicular to the initial surface or to the junction of the pieces joined. Also termed face nailing.

Doorjamb, interior. The surrounding case into which and out of which a door closes and opens. It consists of two upright pieces, called jambs, and a head, fitted together and rabbeted.

Dormer. An internal recess, the framing of which projects from a sloping roof.

Downspout. A pipe, usually of metal, for carrying rainwater from roof gutters.

Dressed and matched (tongue and groove). Boards or planks machined in such a manner that there is a groove on one edge and a corresponding tongue on the other.

Drier, paint. Usually oil-soluble soaps of such metals as lead, manganese, or cobalt, which, in small proportions, hasten the oxidation and hardening (drying) of the drying oils in paints.

Drip. (*a*) A member of a cornice or other horizontal exterior-finish course that has a projection beyond the other parts for throwing off water. (*b*) A groove in the under side of a sill to cause water to drop off on the outer edge, instead of drawing back and running down the face of the building.

Drip cap. A molding placed on the exterior top side of a door or window to cause water to drip beyond the outside of the frame.

Ducts. In a house, usually round or rectangular metal pipes for distributing warm air from the heating plant to rooms, or air from a conditioning device. Ducts are also made of asbestos and composition materials.

Eaves. The margin or lower part of a roof projecting over the wall.

Expansion joint. A bituminous fiber strip used to separate blocks or units of concrete to prevent cracking due to expansion as a result of temperature changes.

Facia or fascia. A flat board, band, or face, used sometimes by itself but usually in combination with moldings, often located at the outer face of the cornice.

Filler (wood). A heavily pigmented preparation used for filling and leveling off the pores in open-pored woods.

Fire-resistive. In the absence of a specific ruling by the authority having jurisdiction, applies to materials for construction not combustible in the temperatures of ordinary fires and that will withstand such fires without serious impairment of their usefulness for at least 1 hour.

Fire-retardant chemical. A chemical or preparation of chemicals used to reduce flammability or to retard spread of flame.

Fire stop. A solid, tight closure of a concealed space, placed to prevent the spread of fire and smoke through such a space.

Flagstone (flagging or flags). Flat stones, from 1 to 4 inches thick, used for rustic walks, steps, floors, and the like. Usually sold by the ton.

Flashing. Sheet metal or other material used in roof and wall construction to protect a building from seepage of water.

Flat paint. An interior paint that contains a high proportion of pigment, and dries to a flat or lusterless finish.

Flue. The space or passage in a chimney through which smoke, gas, or fumes ascend. Each passage is called a flue, which, together with any others and the surrounding masonry, make up the chimney.

Flue lining. Fire clay or terra-cotta pipe, round or square, usually made in all of the ordinary flue sizes and in 2-foot lengths, used for the inner lining of chimneys with the brick or masonry work around the outside. Flue lining should run from the concrete footing to the top of the chimney cap. Figure a foot of flue lining for each foot of chimney.

Footing. The spreading course or courses at the base or bottom of a foundation wall, pier, or column.

Foundation. The supporting portion of a structure below the first-floor construction, or below grade, including the footings.

Framing, balloon. A system of framing a building in which all vertical structural elements of the bearing walls and partitions consist of single pieces extending from the top of the soleplate to the roofplate and to which all floor joists are fastened.

Framing, platform. A system of framing a building in which floor joists of each story rest on the top plates of the story below or on the foundation sill for the first story, and the bearing walls and partitions rest on the subfloor of each story.

Frieze. Any sculptured or ornamental band in a building. Also the horizontal member of a cornice set vertically against the wall.

Frostline. The depth of frost penetration in soil. This depth varies in different parts of the country. Footings should be placed below this depth to prevent movement.

Fungi, wood. Microscopic plants that live in damp wood and cause mold, stain, and decay.

Fungicide. A chemical that is poisonous to fungi.

Furring. Strips of wood or metal applied to a wall or other surface to even it, to form an air space, or to give the wall an appearance of greater thickness.

Gable. That portion of a wall contained between the slopes of a double-sloped roof or that portion contained between the slope of a single-sloped roof and a line projected horizontally through the lowest elevation of the roof construction.

Gable end. An end wall having a gable.

Gloss enamel. A finishing material made of varnish and sufficient pigments to provide opacity and color, but little or no pigment of low opacity. Such an enamel forms a hard coating with maximum smoothness of surface and a high degree of gloss.

Gloss (paint or enamel). A paint or enamel that contains a relatively low proportion of pigment and dries to a sheen or luster.

Girder. A large or principal beam used to support concentrated loads at isolated points along its length.

Grain. The direction, size, arrangement, appearance, or quality of the fibers in wood.

Grain, edge (vertical). Edge-grain lumber has been sawed parallel to the pith of the log and approximately at right angles to the growth rings; i. e., the rings form an angle of 45° or more with the surface of the piece.

Grain, flat. Flat-grain lumber has been sawed parallel to the pith of the log and approximately tangent to the growth rings, i. e., the rings form an angle of less than 45° with the surface of the piece.

Grain, quartersawn. Another term for edge grain.

Grounds. Strips of wood, of same thickness as lath and plaster, that are attached to walls before the plastering is done. Used around windows, doors, and other openings as a plaster stop and in other places for attaching baseboards or other trim.

Grout. Mortar made of such consistency by the addition of water that it will just flow into the joints and cavities of the masonry work and fill them solid.

Gutter or eave trough. A shallow channel or conduit of metal or wood set below and along the eaves of a house to catch and carry off rainwater from the roof.

Gypsum plaster. Gypsum formulated to be used with the addition of sand and water for base-coat plaster.

Header. (*a*) A beam placed perpendicular to joists and to which joists are nailed in framing for chimney, stairway, or other opening. (*b*) A wood lintel.

Hearth. The floor of a fireplace, usually made of brick, tile, or stone.

Heartwood. The wood extending from the pith to the sapwood, the cells of which no longer participate in the life processes of the tree.

Hip. The external angle formed by the meeting of two sloping sides of a roof.

Hip roof. A roof that rises by inclined planes from all four sides of a building.

Humidifier. A device designed to discharge water vapor into a confined space for the purpose of increasing or maintaining the relative humidity in an enclosure.

I-beam. A steel beam with a cross section resembling the letter "I."

Insulating board or fiberboard. A low-density board made of wood, sugarcane, cornstalks, or similar materials, usually formed by a felting process, dried and usually pressed to thicknesses ½ and $\frac{25}{32}$ inch.

Insulation, building. Any material high in resistance to heat transmission that, when placed in the walls, ceilings, or floors of a structure, will reduce the rate of heat flow.

Jack rafter. A rafter that spans the distance from the wallplate to a hip, or from a valley to a ridge.

Jamb. The side post or lining of a doorway, window, or other opening.

Joint. The space between the adjacent surfaces of two members or components joined and held together by nails, glue, cement, mortar, or other means.

304696 O—55——15

Joint cement. A powder that is usually mixed with water and used for joint treatment in gypsum-wallboard finish. Often called "spackle."

Joist. One of a series of parallel beams used to support floor and ceiling loads, and supported in turn by larger beams, girders, or bearing walls.

Knot. That portion of a branch or limb that has become incorporated in the body of a tree.

Landing. A platform between flights of stairs or at the termination of a flight of stairs.

Lath. A building material of wood, metal, gypsum, or insulating board that is fastened to the frame of a building to act as a plaster base.

Lattice. An assemblage of wood or metal strips, rods, or bars made by crossing them to form a network.

Leader. See Downspout.

Ledger strip. A strip of lumber nailed along the bottom of the side of a girder on which joists rest.

Light. Space in a window sash for a single pane of glass. Also, a pane of glass.

Lintel. A horizontal structural member that supports the load over an opening such as a door or window.

Lookout. A short wood bracket or cantilever to support an overhanging portion of a roof or the like, usually concealed from view.

Louver. An opening with a series of horizontal slats so arranged as to permit ventilation but to exclude rain, sunlight, or vision. See also Attic ventilators.

Lumber. Lumber is the product of the sawmill and planing mill not further manufactured other than by sawing, resawing, and passing lengthwise through a standard planing machine, crosscut to length and matched.

Lumber, boards. Yard lumber less than 2 inches thick and 2 or more inches wide.

Lumber, dimension. Yard lumber from 2 inches to but not including 5 inches thick, and 2 or more inches wide. Includes joists, rafters, studding, plank, and small timbers.

Lumber, dressed size. The dimensions of lumber after shrinking from the green dimension and after planing, usually ⅜ inch less than the nominal or rough size. For example, a 2 by 4 stud actually measures 1⅝ by 3⅝ inches.

Lumber, matched. Lumber that is edge-dressed and shaped to make a close tongue-and-groove joint at the edges or ends when laid edge to edge or end to end.

Lumber, shiplap. Lumber that is edge-dressed to make a close rabbeted or lapped joint.

Lumber, timbers. Yard lumber 5 or more inches in least dimension. Includes beams, stringers, posts, caps, sills, girders, and purlins.

Lumber, yard. Lumber of those grades, sizes, and patterns which are generally intended for ordinary construction, such as framework and rough coverage of houses.

Mantel. The shelf above a fireplace. Originally referred to the beam or lintel supporting the arch above the fireplace opening. Used also in referring to the entire finish around a fireplace, covering the chimney breast in front and sometimes on the sides.

Masonry. Stone, brick, concrete, hollow-tile, concrete-block, gypsum-block, or other similar building units or materials or a combination of the same, bonded together with mortar to form a wall, pier, buttress, or similar mass.

Metal lath. Sheets of metal that are slit and drawn out to form openings on which plaster is spread.

Millwork. Generally all building materials made of finished wood and manufactured in millwork plants and planing mills are included under the term "millwork." It includes such items as inside and outside doors, window and doorframes, blinds, porchwork, mantels, panelwork, stairways, moldings, and interior trim. It does not include flooring, ceiling, or siding.

Miter. The joining of two pieces at an angle that bisects the angle of junction.

Moisture content of wood. Weight of the water contained in the wood, usually expressed as a percentage of the weight of the oven-dry wood.

Mortise. A slot cut into a board, plank, or timber, usually edgewise, to receive tenon of another board, plank, or timber to form a joint.

Molding. Material, usually patterned strips, used to provide ornamental variation of outline or contour, whether projections or cavities, such as cornices, bases, window and doorjambs, and heads.

Mullion. A slender bar or pier forming a division between panels or units of windows, screens, or similar frames.

Muntin. The members dividing the glass or openings of sash, doors, and the like.

Natural finish. A transparent finish, usually a drying oil, sealer, or varnish, applied on wood for the purpose of protection against soiling or weathering. Such a finish may not seriously alter the original color of the wood or obscure its grain pattern.

Newel. A post to which the end of a stair railing or balustrade is fastened. Also, any post to which a railing or balustrade is fastened.

Nonbearing wall. A wall supporting no load other than its own weight.

Nosing. The projecting edge of a molding or drip. Usually applied to the projecting molding on the edge of a stair tread.

O. C., on center. The measurement of spacing for studs, rafters, joists, and the like in a building from center of one member to the center of the next member.

O. G., or ogee. A molding with a profile in the form of a letter S; having the outline of a reversed curve.

Paint. L, pure white lead (basic-carbonate) paint; TLZ, titanium-lead-zinc paint; TZ, titanium-zinc paint.

Panel. A large, thin board or sheet of lumber, plywood, or other material. A thin board with all its edges inserted in a grove of a surrounding frame of thick material. A portion of a flat surface recessed or sunk below the surrounding area, distinctly set off by molding or some other decorative device. Also, a section of floor, wall, ceiling, or roof, usually prefabricated and of large size, handled as a single unit in the operations of assembly and erection.

Paper, building. A general term for papers, felts, and similar sheet materials used in buildings without reference to their properties or uses.

Paper, sheathing. A building material, generally paper or felt, used in wall and roof construction as a protection against the passage of air and sometimes moisture.

Parting stop or strip. A small wood piece used in the side and head jambs of double-hung windows to separate upper and lower sash.

Partition. A wall that subdivides spaces within any story of a building.

Penny. As applied to nails it originally indicated the price per hundred. The term now serves as a measure of nail length and is abbreviated by the letter "d."

Pier. A column of masonry, usually rectangular in horizontal cross section, used to support other structural members.

Pigment. A powdered solid in suitable degree of subdivision for use in paint or enamel.

Pitch. The incline or rise of a roof. Pitch is expressed in inches or rise per foot of run, or by the ratio of the rise to the span.

Pitch pocket. An opening extending parallel to the annual rings of growth, that usually contains, or has contained, either solid or liquid pitch.

Pith. The small, soft core at the original center of a tree around which wood formation takes place.

Plate. (1) A horizontal structural member placed on a wall or supported on posts, studs, or corbels to carry the trusses of a roof or to carry the rafters directly. (2) A shoe, or base member, as of a partition or other frame. (3) A small, relatively flat member placed on or in a wall to support girders, rafters, etc.

Plough. To cut a groove, as in a plank.

Plumb. Exactly perpendicular; vertical.

Ply. A term to denote the number of thicknesses or layers of roofing felt, veneer in plywood, or layers in built-up materials, in any finished piece of such material.

Plywood. A piece of wood made of three or more layers of veneer joined with glue and usually laid with the grain of adjoining plies at right angles. Almost always an odd number of plies are used to provide balanced construction.

Porch. A floor extending beyond the exterior walls of a building. It may be covered and enclosed or unenclosed.

Pores. Wood cells of comparatively large diameter that have open ends and are set one above the other to form continuous tubes. The openings of the vessels on the surface of a piece of wood are referred to as pores.

Preservative. Any substance that, for a reasonable length of time, will prevent the action of wood-destroying fungi, borers of various kinds, and similar destructive life when the wood has been properly coated or impregnated with it.

Primer. The first coat of paint in a paint job that consists of two or more coats; also the paint used for such a first coat.

Putty. A type of cement usually made of whiting and boiled linseed oil, beaten or kneaded to the consistency of dough and used in sealing glass in sash, filling small holes and crevices in wood, and for similar purposes.

Quarter round. A molding that presents a profile of a quarter circle.

Rabbet. A rectangular longitudinal groove cut in the corner of a board or other piece of material.

Radiant heating. A method of heating, usually consisting of coils or pipes placed in the floor, wall, or ceiling.

Rafter. One of a series of structural members of a roof designed to support roof loads. The rafters of a flat roof are sometimes called roof joists.

Rafter, hip. A rafter that forms the intersection of an external roof angle.

Rafter, jack. A rafter that spans the distance from a wallplate to a hip or from a valley to a ridge.

Rafter, valley. A rafter that forms the intersection of an internal roof angle.

Rail. A horizontal bar or timber of wood or metal extending from one post or support to another as a guard or barrier in a fence, balustrade, staircase, etc. Also, the cross or horizontal members of the framework of a sash, door, blind, or any paneled assembly.

Rake. The trim members that run parallel to the roof slope and from the finish between wall and roof.

Raw linseed oil. The crude product expressed from flaxseed and usually without much subsequent treatment.

Reflective insulation. Sheet material with one or both surfaces of comparatively low heat emissivity that, when used in building construction so that the surfaces face air spaces, reduces the radiation across the air space.

Reinforcing. Steel rods or metal fabric placed in concrete slabs, beams, or columns to increase their strength.

Resin-emulsion paint. Paint, the vehicle (liquid part) of which consists of resin or varnish dispersed in fine droplets in water, analogous to cream, which consists of butterfat dispersed in water.

Relative humidity. The amount of water vapor expressed as a percentage of the maximum quantity that could be present in the atmosphere at a given temperature. (The actual amount of water vapor that can be held in space increases with the temperature.)

Ribbon. A narrow board let into the studding to add support to joists.

Ridge. The horizontal line at the junction of the top edges of two sloping roof surfaces. The rafters at both slopes are nailed at the ridge.

Ridge board. The board placed on edge at the ridge of the roof to support the upper ends of the rafters.

Rise. The height a roof rising in horizontal distance (run) from the outside face of a wall supporting the rafters or trusses to the ridge of the roof. In stairs, the perpendicular height of a step or flight of steps.

Riser. Each of the vertical boards closing the spaces between the treads of stairways.

Roll roofing. Roofing material, composed of fiber and saturated with asphalt, that is supplied in rolls containing 108 square feet in 36-inch widths. It is generally furnished in weights of 55 to 90 pounds per roll.

Roof sheathing. The boards or sheet material fastened to the roof rafters on which the shingle or other roof covering is laid.

Rubber-emulsion paint. Paint, the vehicle of which consists of rubber or synthetic rubber dispersed in fine droplets in water.

Run. In reference to roofs, the horizontal distance from the face of a wall to the ridge of the roof. Referring to stairways, the net width of a step; also the horizontal distance covered by a flight of steps.

Sapwood. The outer zone of wood, next to the bark. In the living tree it contains some living cells (the heartwood contains none), as well as dead and dying cells. In most species, it is lighter colored than the heartwood. In all species, it is lacking in decay resistance.

Sash. A single frame containing one or more lights of glass.

Sash balance. A device, usually operated with a spring, designed to counterbalance window sash. Use of sash balances eliminates the need for sash weights, pulleys, and sash cord.

Saturated felt. A felt which is impregnated with tar or asphalt.

Scratch coat. The first coat of plaster, which is scratched to form a bond for the second coat.

Scribing. Fitting woodwork to an irregular surface.

Sealer. A finishing material, either clear or pigmented, that is usually applied directly over uncoated wood for the purpose of sealing the surface.

Seasoning. Removing moisture from green wood in order to improve its serviceability.

Semigloss paint or enamel. A paint or enamel made with a slight insufficiency of nonvolatile vehicle so that its coating, when dry, has some luster but is not very glossy.

Shake. A handsplit shinge, usually edge grained.

Sheathing. The structural covering, usually wood boards, plywood, or wallboards, placed over exterior studding or rafters of a structure.

Sheathing paper. See Paper, sheathing.

Shellac. A transparent coating made by dissolving lac, a resinous secretion of the lac bug (a scale insect that thrives in tropical countries, especially India), in alcohol.

Shingles. Roof covering of asphalt, asbestos, wood, tile, slate, or other material cut to stock lengths, widths, and thicknesses.

Shingles, siding. Various kinds of shingles, some especially designed, that can be used as the exterior side-wall covering for a structure.

Shiplap. See Lumber, shiplap.

Siding. The finish covering of the outside wall of a frame building, whether made of weatherboards, vertical boards with battens, shingles, or other material.

Siding, bevel (lap siding). Used as the finish siding on the exterior of a house or other structure. It is usually manufactured by resawing dry square-surfaced boards diagonally to produce two wedge-shaped pieces. These pieces commonly run from 3/16 inch thick on the thin edge to 1/2 to 3/4 inch thick on the other edge, depending on the width of the siding.

Siding, drop. Usually 3/4 inch thick and 6 inches wide, machined into various patterns. Drop siding has tongue-and-groove joints, is heavier, has more structural strength, and is frequently used on buildings that require no sheathing, such as garages and barns.

Sill. The lowest member of the frame of a structure, resting on the foundation and supporting the uprights of the frame. The member forming the lower side of an opening, as a door sill, window sill, etc.

Soffit. The underside of the members of a building, such as staircases, cornices, beams, and arches, relatively minor in area as compared with ceilings.

Soil cover (ground cover). A light roll roofing used on the ground of crawl spaces to minimize moisture permeation of the area.

Soil stack. A general term for the vertical main of a system of soil, waste, or vent piping.

Sole or soleplate. A member, usually a 2 by 4, on which wall and partition studs rest.

Span. The distance between structural supports such as walls, columns, piers, beams, girders, and trusses.

Splash block. A small masonry block laid with the top close to the ground surface to receive roof drainage and to carry it away from the building.

Square. A unit of measure—100 square feet—usually applied to roofing material. Side-wall coverings are often packed to cover 100 square feet and are sold on that basis.

Stain, shingle. A form of oil paint, very thin in consistency, intended for coloring wood with rough surfaces, like shingles, without forming a coating of significant thickness or gloss.

Stair landing. A platform between flights of stairs or at the termination of a flight of stairs.

Stair rise. The vertical distance from the top of one stair tread to the top of the one next above.

Stair carriage. A stringer for steps on stairs.

Stool. The flat, narrow shelf forming the top member of the interior trim at the bottom of a window.

Storm sash or storm window. An extra window usually placed on the outside of an existing window as additional protection against cold weather.

Story. That part of a building between any floor and the floor or roof next above.

String, stringer. A timber or other support for cross members. In stairs, the support on which the stair treads rest; also stringboard.

Stucco. Most commonly refers to an outside plaster made with Portland cement as its base.

Stud. One of a series of slender wood or metal structural members placed as supporting elements in walls and partitions. (Plural: studs or studding.)

Subfloor. Boards or sheet material laid on joists over which a finish floor is to be laid.

Tail beam. A relatively short beam or joist supported in a wall on one end and by a header on the other.

Trimmer. A beam or joist to which a header is nailed in framing for a chimney, stairway, or other opening.

Termites. Insects that superficially resemble ants in size, general appearance, and habit of living in colonies; hence, they are frequently called "white ants." Subterranean termites do not establish themselves in buildings by being carried in with lumber but by entering from ground nests after the building has been constructed. If unmolested, they eat out the woodwork, leaving a shell of sound wood to conceal their activities, and damage may proceed so far as to cause collapse of parts of a structure before discovery. There are about 56 species of termites known in the United States; but the two major species, classified from the manner in which they attack wood, are ground-inhabiting or subterranean termites, the most common, and drywood termites, found almost exclusively along the extreme southern border and the Gulf of Mexico in the United States.

Termite shield. A shield, usually of noncorrodible metal, placed in or on a foundation wall or other mass of masonry or around pipes to prevent passage of termites.

Threshold. A strip of wood or metal beveled on each edge and used above the finished floor under outside doors.

Toenailing. To drive a nail at a slant with the initial surface in order to permit it to penetrate into a second member.

Tread. The horizontal board in a stairway on which the foot is placed.

Truss. A frame or jointed structure designed to act as a beam of long span, while each member is usually subjected to longitudinal stress only, either tension or compression.

Trim. The finish materials in a building, such as moldings, applied around openings (window trim, door trim) or at the floor and ceiling of rooms (baseboard, cornice, picture molding).

Turpentine. A volatile oil used as a thinner in paints and as a solvent in varnishes. Chemically, it is a mixture of terpenes.

Undercoat. A coating applied prior to the finishing or top coats of a paint job. It may be the first of two or the second of three coats. In some usage of the word it may become synonymous with priming coat.

Valley. The internal angle formed by the junction of two sloping sides of a roof.

Vapor barrier. Material used to retard the flow of vapor or moisture into walls and thus to prevent condensation within them. There are two types of vapor barriers, the membrane that comes in rolls and is applied as a unit in the wall or ceiling construction, and the paint type, which is applied with a brush. The vapor barrier must be a part of the warm side of the wall.

Varnish. A thickened preparation of drying oil or drying oil and resin suitable for spreading on surfaces to form continuous, transparent coatings, or for mixing with pigments to make enamels.

Vehicle. The liquid portion of a finishing material; it consists of the binder (nonvolatile) and volatile thinners.

Veneer. Thin sheets of wood.

Vent. A pipe installed to provide a flow of air to or from a drainage system or to provide a circulation of air within such system to protect trap seals from siphonage and back pressure.

Vermiculite. A mineral closely related to mica, with the faculty of expanding on heating to form lightweight material with insulation quality. Used as bulk insulation and also as aggregate in insulating and acoustical plaster and in insulating concrete floors.

Volatile thinner. A liquid that evaporates readily and is used to thin or reduce the consistency of finishes without altering the relative volumes of pigments and nonvolatile vehicle.

Wallboard. Woodpulp, gypsum, or other materials made into large, rigid sheets that may be fastened to the frame of a building to provide a surface finish.

Wane. Bark, or lack of wood or bark from any cause, on edge or corner of a piece.

Wash. The upper surface of a member or material when given a slope to shed water.

Water repellent. A liquid designed to penetrate into wood and to impart water repellency to the wood.

Water table. A ledge or offset on or above a foundation wall, for the purpose of shedding water.

Weatherstrip. Narrow strips made of metal, or other material, so designed that when installed at doors or windows they will retard the passage of air, water, moisture, or dust around the door or window sash.

Wood rays. Strips of cells extending radially within a tree and varying in height from a few cells in some species to 4 inches or more in oak. The rays serve primarily to store food and to transport it horizontally in the tree.

INDEX

Page

Air ducts, framing 93
Air inlets, minimum areas 111
Air spaces, effectiveness 100
Aluminum foil, vapor barrier 109
Aluminum paint:
  undercoat for house paints 189
  vapor barrier 109
Anchor bolts, depth, spacing 12
Annularly grooved nails, flooring 131
Asbestos-cement shingles, siding 87
Ashlar-stone foundation 15
Asphalt coatings on plywood 110
Asphalt paper, effect of wetting, vapor barrier 109
Asphalt shingles:
  application 62
  humping 64
  nailing 64
  storage 207
  weight recommended 62
  with wood sheathing 53
Asphalt-tile floor:
  laying 132
  damaged by grease 133
Attic inspection:
  condensation 202
  maintenance 211
Attic ventilation 106, 110

Balloon-frame construction:
  brick, stone, or stucco houses 27, 87
  sills 26
  wall framing 33
Balustrades, types 166
Base for plaster finish 118
Basement floors:
  drainage 179
  thickness 179
  distance below grade 4
Basement, maintenance 209
Basement posts, size and spacing 23
Basement stairs, construction 157
Basement rooms, floor level, ceiling height 4
Base molding 144
Bathtub, doubled joists for 89
Batt insulation:
  placement 106
  sizes 101
Batter boards:
  arrangement 3
  method of setting 5
Bay window, framing 31
Beams:
  collar 44
  notched 15
  steel 23
  tail 30

Page

Bed molding 58
Bevel siding. See Siding, wood.
Blanket insulation:
  description 101
  placement 106
  vapor barrier 101, 109
Bolster 26
Bolts, anchor 12
Boston ridge 68, 160
Box cornice, construction 58
Box sill, for platform construction 26
Brick veneer, installation 14, 88
Bridging, between joists 28
Building costs, method of reducing 204
Built-up girders 23, 25
Built-up roof:
  installation 66
  maximum slope 62
  service life 66

Cabinets 145
Calcium chloride, for damp basement 210
Cant strips 65, 67
Capillarity, remedy for 212
Casement-sash windows 71
Casing 135
Calking, where required 212
Ceiling framing, construction 40–45
Ceiling moldings, installation types 144
Cement-coated nails 125
Ceramic-tile floor, installation 133
Chimney openings in roof 55
Chimney:
  construction 171
  flashing 160
  flue installation 171
  framing 28, 177
  height 171
  masonry 171
  precast blocks 206
  prefabricated 173
China cabinets 148
Chlorinated phenol, use in natural finishes 191
Clapboard siding 81
Clearances for interior doors 140
Closed cornice, construction 58
Closets, types 146
Coefficient of transmission 100
Cold-weather condensation, protection from 109
Collar beams 44
Columns 165
Concrete-block walls. See Foundation walls.

Page
Concrete forms, types 9
Concrete-slab floors:
duct work for radiant heating 20, 22
faults 16
finish floors 22
construction 16
insulation 16, 18, 20
on sloping ground 16
requirements for 16
vapor barriers 20
Concrete work 5–8
Condensation 109
Construction costs, methods of reducing 206
Copper-coated paper, use for flashing 158
Copper, weight recommended for flashing 158
Corner bead, plaster reinforcement 121
Corner boards, use with siding 85
Corner intersections, details 36
Cornerites, plaster reinforcement 121
Cornice, types 58
Cornice returns, types 58
Counterflashing, at chimneys 161
Cove, for concrete-block walls 11
Crawl space:
inspection 3, 201
maintenance 210
ventilation 110, 117
Cricket flashing 161
Crown molding, at frieze and rake boards 60
Cypress, paintability 181

Damper, fireplace, position 174
Decay 196
Decay safeguards:
attic ventilation 200
crawl-space ventilation 199
designing for 199
inspection 201
insulation of pipes 200
metal shields 198
soil cover 199
treatment of wood 199
Decay resistance, heartwood, sapwood 196
Decks, roof sheathing 53
Dehumidifiers, use 210
Desiccant, use for basement dampness 210
Diagonal sheathing, use 49
Diagonals, as check for square corners 2
Dimension lumber, cost 206
Disappearing stairs 157
Door areas, insulation 106
Door clearances 140
Door frames, exterior 77
Door frames, interior, installation, parts 135–141
Door frames, special 140
Door frames, storage 207
Door hardware, installation 141

Page
Door headers, size, spacing 35
Door knob, standard height 140
Doors, exterior:
framing, sizes, types 77
painting of 190
Doors, interior 135–141
Doorstops, installation 141
Dormers 45
Double-formed walls 9
Double-hung windows 68
Downspout, installation 162
Drainage:
finish grade 4
outer wall 8
Draintile, installation, location 8
Driveways, construction, planning 177
Drop siding. See Siding, wood.
Dry-wall construction:
advantages, disadvantages 118
painting 109
Dry-wall finish:
application 123
decorative treatment 128
moisture content 128
types 118, 123
fiberboard:
application 126
minimum thickness 123
gypsum board 124
plywood:
application 126
minimum thickness 123
wood plank, application 126
Dry well, connection to draintile 8
Dry-wood termites:
damage caused by 197
where common 195, 197
Ducts:
cause of paint failure 93
heating systems 93

Eastern redcedar, paintability 181
Electrical outlets:
installation 98
insulation 107
Electric wiring 97
End-wall framing:
at sill and ceiling 37
for balloon and platform construction 37
Enamel, types, use 192
Excavation 24
Expanded-metal lath:
as plaster base 118
minimum weights 118
use around tub recess 119
Exterior finish, cost 206
Exterior stairs, construction 157
Exterior trim 56
Extractives, effect on paint 181

Facia board, in open cornice 58
Fiberboard dry-wall finish:
application 126
thickness 123
Fiberboard sheathing 48

Page
Fiberboard tile 126
Fill insulation:
placement of 106
use 101
Finish, ridge 68
Finish flooring 128
Finish grade 3
Finishes, properties 182
Fireplace:
construction, design 174
efficiency 171
millwork 149
Fire protection:
causes of fires 202
construction safeguards 203
control of hazards 204
use of fire-retarding treatments 204
Fire-retardant coatings 204
Fire-retardant insulation board 204
Fires, causes 202
Flashing 158
Flat-grain figure 186
Flat paint 192
Flat roofs:
construction and design 40
ventilation required 111
Flexible insulation, types 101
Floor coverings 128
Floor framing:
girders 23
nailing 28
notched for pipes 90
posts 23
quality, seasoning requirements 22
types 22
Flooring:
care of after delivery 208
cause of open joints 131
cost considerations 206
defects, remedy for 213
method of nailing first strips 131
moisture content recommended 131
nails, types of 131
Floor joists. See Joists.
Floors, painting of 193
Floor slabs. See Concrete-slab floors.
Floor squeaks, cause, remedy 131
Flue lining 175
Flush doors:
construction 77, 135
facings, species 135
Formwork for concrete walls 9
Footings 6–8
Foundation:
concrete 5
drainage 4
excavation 4
laying 9–12
selection 205
Foundation frames, painting 13
Foundation walls:
brick veneer 14
concrete-block 10
concrete work 5
drainage 8

Page
Foundation walls—Continued
footings 6
formwork 9
height 3, 12
masonry piers 12
poured concrete 12
reinforcing 13
sill anchors 12
thickness 9
Framing for:
air ducts 93
bay windows 31
ceiling 40–47
chimneys 28
dormers 45
end-wall 37
fireplaces 28
floor furnace 93
floor joists 27
floor openings 28
floors 22–31
heating systems 92–97
overhangs 45
plumbing 88–91
roofs 40–47
sills 37
soil stack 91
stairwells 28, 155
valleys 42
ventpipe 91
wall furnace 94
walls 31–39
Framing lumber, seasoning requirements 23, 32
Framing materials, protection of 207
Framing members, dry-wall 123
French doors, parts 77
Frieze board 58, 61
Fume-resistant paints 187
Fungi, decay, description 196
Furnace framing 94

Gable roofs 41
Galvanized metal flashing 158
Garages 167
Girders:
bolster for 26
built-up 23
floor framing for 22
joist installation 25
solid 23
spaced 26
steel, wood 23
Glazed doors, parts 77
Gooseneck, use with downspout 164
Grade, sloped for drainage 4
Green lumber, leads to decay 199
Gutters, installation, types 162
Gypsum board:
applied with undercourse 125
dry-wall finish 123
finishing operation for 125
horizontal application for economy 206
installation 124
joints, cementing and taping of 125

Page

Gypsum-board lath:
application 119
nailing 119
perforated 118
plaster base 119
sizes 118
with foil back 118
Gypsum lath-aluminum foil vapor barrier 109
Gypsum sheathing, application, nailing, sizes 49–51

Hanging gutters, installation 163
Hardwood flooring, patterns 129
Hardwoods, staining 192
Head flashing, extent of 158
Headers:
door 35
joists 28
nailing 28
stair framing 155
trussed 35
window 35
Hearth 174
Heartwood, decay resistance 196
Heating systems, framing for 92
Hinges, door, installation, sizes 141
Hip roof:
air inlets, minimum areas 111
construction 42
Hollow-backed flooring, description 128
Horizontal sheathing, installation 49
Horizontal lath nailers, installation 38
Hot-water heating, framing for 95
Humidifier, precautions for use 214

Ice dams:
at gutters 110
flashing for 160
in roof valleys 110
protection from 65
reduced by ventilation 110
remedy for 211
Incense-cedar, paintability 181
Insulating fiberboard lath, as plaster base 118
Insulating lath, application, nailing 118
Insulating plaster, as wall finish 123
Insulation:
as cooling device 106
classes 100
coefficient of transmission 100
for concrete slabs 20
for door and window areas 106
installment 106
precautions for use 106
thermal properties 100
types 101
U-value 100
where needed 105
Interior doors, installation, types 135
Interior finish:
cost considerations 206
dry-wall construction 117, 123
moisture content recommended 135

Page

Interior finish—Continued
principal types 117
protection of during construction 208
Interior trim 135–145

Jack rafters 45
Joists:
blocking for heat ducts 28
doubled as bathtub supports 89
doubled under bearing walls 28
drilled for pipes 91
installation 27
notched for pipes 90
quality requirements 22
sizes, spans 27
spaced for air ducts 93
spaced for heat ducts 28
thickness of 22

Keyways, use with reinforcing 14
Kitchen cabinets, arrangements, sizes 145
Keene's cement, for use in bathrooms 123
Knotty pine, as decorative wall finish 128

Lath nailers 38
Leader strips, fasteners for downspouts 164
Ledger strips, use with girders 23
Let-in ribbon, use on studs 38
Lintels:
doors, windows 35
size and spacing 35
reinforced-concrete 13
Linoleum:
base 30, 132
laying 132
on plywood 132
on wood 132
thickness 132
Locks, door, installation of 141
Lookouts:
cornice 58
nailing of 58
overhanging roof 40
Louvers 110
Lumber, piling and storage 207

Maintenance:
attic 211
basement 209
calking at joints 212
crawl space 210
doors 213
masonry 212
plaster 212
roof 211
unheated rooms 213
walls, exterior 212
Mantel 149
Materials:
protection of on site 207
selection 205
Masonry piers, height above grade, spacing, sizes 12
Masonry veneer, installation 14, 88

Page

Membrane vapor barrier, application 109
Metal covers, for dormer roofs, entry hoods, porch roofs 160
Metal-foil vapor barrier 109
Metal-sash windows, types 75
Metal shields, use as decay safeguard 198
Metal ridge roll, as substitute for Boston ridge 160
Metal roofs 62
Millwork 145
Moisture condensation:
  moisture pickup, defects caused by 208
  moisture on doors and windows, prevention of 213
  moisture vapor, concentrations of 110
Mold fungi, as decay warning 196
Moldings:
  base, installation, types 144
  ceiling, installation, types 144
  crown, at rake and frieze boards 58
Multiple-stud post, use at intersections 36

Nailers, for dry-wall finish 126
Nailing methods for:
  asphalt shingles 64
  bevel siding 84
  ceiling framing 40
  ceiling joists 42
  drop siding 84
  end studs 42
  fiberboard sheathing 51
  fireplace framing 28
  floor framing 28
  gypsum sheathing 51
  headers 28
  jack rafters 45
  plywood roof sheathing 54
  plywood subfloor 30
  rafters 45
  roof boards, closed 53
  roof framing 44
  stair-well framing 28
  trimmers 28
  wood shingles 86
Nailing strips, for sheathing and shingles 53
Nailing surface, provision for at ceiling line 39
Nails:
  barbed 52
  concrete forms 9
  corrosion-resistant 189
  finish flooring 128
  rust-resistant 86, 209
  siding 82
  steel, as cause of rust spots 212
Natural finishes:
  for siding and trim 191
  number of coats recommended 190
  types 192
  wood species preferred for 135

Page

Oak, paintability 181
Ogee (O. G.), base molding 144
Oil finishes, use 191
Oil stains, for hardwoods and softwoods 192
Open cornice, construction 58
Overhangs, construction and framing 45

Paint:
  as vapor barrier 109
  blistering of during construction 109
  failure, major cause 212
  improved service 186
  thinning 190
  tinting 189
  use on dry-wall construction 109
Paintability of various woods 181
Painting:
  characteristics of woods for 181
  floors 193
  interior walls 191
  number of coats 190
  plywood 194
  primer coats, application 189
  rate of coverage 189
  summerwood 181
  wallboards 194
Paints:
  aluminum paint, as priming coat 183
  enamels, types of 192
  flat, types, workability 192
  fume-resistant 187
  gloss enamel, types 192
  house paints, main groups 187
  natural finishes, types 192
  oil finishes, use 191
  properties 181
  semigloss enamel, use 192
  shingle stains, durability 191
  titanium-lead-zinc, composition 187
  varnish, durability 190
  white lead:
    components 187
    use on siding corners 86
  wood-sealers, use 191
Panel doors:
  parts 135
  types 135
Paper sheathing, use 52
Parquet floors:
  installation 131
  plywood base for 30
Pecky cypress, as decorative wall finish 128
Piers, masonry, capping, height, spacing and sizes 12
Piers, poured concrete, height, sizes, spacing 12
Pilasters, placement 11
Pipe notches, depth in joists 90
Pitched roofs:
  gable 41
  hip 42
  materials for covering 62
Planning, economy 205

Page
Platform construction, end-wall framing 37
Plaster:
application 118–123
brown coat 123
final coat 123
insulating, as wall finish 123
maintenance 212
materials 123
protection of in cold weather 208
putty finish 123
reinforcement 121
sand-float finish 123
scratch coat 123
thickness 123
Plaster base 118
Plaster grounds, definition, types, use 122
Plumbing, framing for 88
Plywood:
dry-wall finish, application 126
painting 194
roof sheathing, installation 53
sheathing, application 49–53
siding, application 84
subfloor, installation 28
Port-Orford-cedar, paintability of 181
Porches:
columns for 165
construction principles 164
framing for 164
Posts:
basement, size, spacing 23
floor framing for 22
girder supports 23
H-section 23
round 23
Poured-concrete walls 9
Preservative treatment:
before painting 186
decay, methods, specification 199
siding 82
termites, methods, specification 200
with natural finishes 191
Projected windows, installation 73

Radiant heating:
concrete floor slabs, installation 22
framing for 96
location of pipes 96
Rafters:
flat roof 40
jack, nailing 45
overhanging roof 40
Rainwater back of siding, remedy for
Rake board, at siding ends 60
Random-width plank flooring 128
Redwood, paintability 181
Reflective insulation 101
Reinforcing rods for concrete walls 13
Reinforcing ties for garage or porch walls 13
Resin, effect on paint 181
Ridge flashing, use on wood-shingled houses 160

Page
Rigid insulation, application 50
Riser, ratio to tread 154
Rod ties, placement 13
Rods, reinforcing in concrete walls 13
Roofs:
Boston ridge for 68, 160
built-up 66, 160
cost 205
covering materials 62–67
decked, sheathing for 53
dormers for 45
flashing for 158–162
flat 40
framing for 40–47
gable 41
hip 42
insulation 100
leaking, causes 211
lumber seasoning requirements 40
maintenance inspection 211
metal 62, 160
metal ridge for 68, 160
overhanging 40
pitched 41
sheathing for:
closed, spaced installation 53
grades 53
nailed to rafters diagonally 53
plywood, application 53
species of wood used 53
wood board, laying 55
trusses for 47
types of 40
valleys 42
ventilation of 106
Roof trusses, lightweight 47
Room sizes, planning 205
Rust-resistant nails, economy 209
Rust on siding, cause and remedy 212
Rubber-tile floor:
base for, laying of 132

Saddle flashing, use on roof slope 161
Sapwood:
decay resistance 196
protection from blue stain 191
Saturated felt, use in built-up roofs 66
Scratch coat, on plaster wall 123
Scabs, reinforcement for stock-vent wall 88
Seasoning:
of roof lumber 40
of sheathing used with asphalt shingles 53
wall-framing lumber 32
Setback, minimum required 2
Sheathing paper:
application 52
where required 52
Sheathing, roof:
chimneys 55
closed installation 53
grades 53
plywood, application, thickness, nailing 53

Page

Sheathing roof—Continued
spaced installation 53
valleys 56
wood, grades, installation 53
Sheathing, wall:
fiberboard, sizes, thickness, installation 48, 50
gypsum board, sizes, thickness, installation 49
plywood, sizes, thickness, installation 48, 51
wood, installation, patterns 48
Shed roofs, description 41
Sheet-metal work, types, weights of materials 158
Shellac 193
Shingles:
asbestos-cement, application 87
asphalt:
laying, nailing, weight 62
with wood sheathing 53
exposure distance 62
flashing for 160
nailing strips, use 54
wood:
double-coursed 86
exposure recommended 65, 86
grades 65, 86
laying, nailing 66, 86
single-coursed 86
species 65
square feet per bundle 65
staggered patterns 86
types, widths 86
Shingle stain 191
Shiplap sheathing 48
Sidewalk construction 179
Sideyard requirements 2
Siding:
asbestos-cement, application 87
head lap, minimum 82
installation 82
nails 82
plywood:
application 84
stud spacing for 81
thickness 81
spacing, maximum 82
started on water table 82
storage 207
treated 81
types 79
wood:
finishing at corners 84
grades, species, types 79
moisture content 79
properties required 79
Sill anchors, depth, spacing, sizes 12
Sill flashing, extent of 159
Sill plate:
balloon-frame construction, use in 27
leveling of 12
Sills 26
Site, condition of 1

Page

Sliding doors 137
Snow dams, protection from 62
Sod, removal and storage 4
Soffit 58
Soil cover 117
Soil, semiplastic 2
Soil stack, framing for 88, 91
Spaced sheathing, installation 53
Splash block 164
Square-edge sliding 81
Stack vent, framing for 88
Stain fungi, decay warning 196
Stairs:
basement, construction 157
disappearing 157
exterior, construction 157
parts 149
ratio of riser to tread 154
types 149
Stairways:
design, installation 154
Stairwell framing 28, 155
Standing-center flashing, water stop 160
Stationary windows 71
Stepped footings for sloping lot 7
Stone veneer application 14, 88
Stops, interior door frames 141
Storage closets, types 146
Storm sash 214
Strike plate, door, installation 141
Stringer, installation in stairways 155
Strip flooring installation 128
Strongback, for dry-wall finish 123
Stucco side-wall finish 87
Stucco plaster 88
Studs:
end-wall 37
grades of 32
multiple 36
species 32
Subfloor:
boards, patterns, sizes 28
drainage 30
laying 28
parts 28
plywood, joist spacing, nailing, thickness 30
quality requirements 23
Subterranean termites 194, 197
Subsoil, condition 1
Summerwood, painting 181

Tail joists 155
Temperature, requirements during construction 208
Temperature zones, map of 102
Termites:
classes 194
dry-wood, where common 197
inspection of crawl space for 3
protection from 12, 22, 194, 200
subterranean, where common 197
Termite shields:
installation 12
use 200

Page
Thermal properties, building materials 100
Ties, reinforcing 13
Tile floor, ceramic, installation 133
Tile floor, plywood base for 30
Tin, weight recommended for flashing 158
Titanium-lead-zinc paint, composition 187
Topsoil, removal and storage 4
Trim:
exterior:
decay resistance 56
fastenings 57
moisture content 58
interior:
installation 135
parts for doors 135
properties desired 56
window, installation 142
Trimmers 30
Trimmer joists, for stair framing 155
Trussed headers 35
Trusses, lightweight roof 47

Unheated rooms, maintenance, ventilation 213
U-values 100

Valley:
flashing 160
framing 42
sheathing 56
Vapor barriers:
at joist ends in two-story houses 107
effective materials for 109
in blanket insulation 106, 109
in concrete-slab floor 20
membrane type 109
near windows 106
paint coatings 109
why needed 109
Varnish 190
Ventilation:
attic 106, 110
cold-weather, need for 211
crawl spaces, area and vents required 117
ice dams reduced by 110
moisture removed by 110
roofs 111
unheated rooms 213
Ventilators, location, types 115
Ventpipe, framing for 91

Page
Vertical-grain flooring, durability 128
Vertical siding, types, use 81
Volatile oils, effect on paint 181

Wall coverings:
interior 117
shingles, types of 86
Wall footings, installation, use, sizes 6
Wall framing, grades, requirements 31
Wall intersections, nailing 36
Wall sections, horizontal, assembly for economy 206
Wall sheathing 47–52
Wall ties, reinforcing 13
Walls, concrete block 10
Walls, poured concrete 9
Waterproof coatings 123, 212
Water-repellent preservative, for siding 82, 186, 212
Water vapor:
damage caused by 199
generation 109
Weep holes, for brick veneer 15
Western redcedar, paintability 181
White-lead paint, components 187
White-pocket fir, as decorative wall finish 128
Window:
areas, insulation 106
casing, painting 190
frames, storage 207
headers, sizes, spacing 35
sash, painting 190
sills, drainage 71
stool 143
trim, installation 142
Windows:
casement sash, framing 71
checkrail 68
double-hung 68
insulated glass 68
maintenance 213
metal-sash 75
minimum area 68
projected 73
stationary 71
weatherstripping for 68
Wiring, electrical, installation 97
Woods, decay resistance of 196
Woods, painting characteristics 181
Wormy chestnut, decorative wall finish 128

U. S. GOVERNMENT PRINTING OFFICE: 1955 O—304696
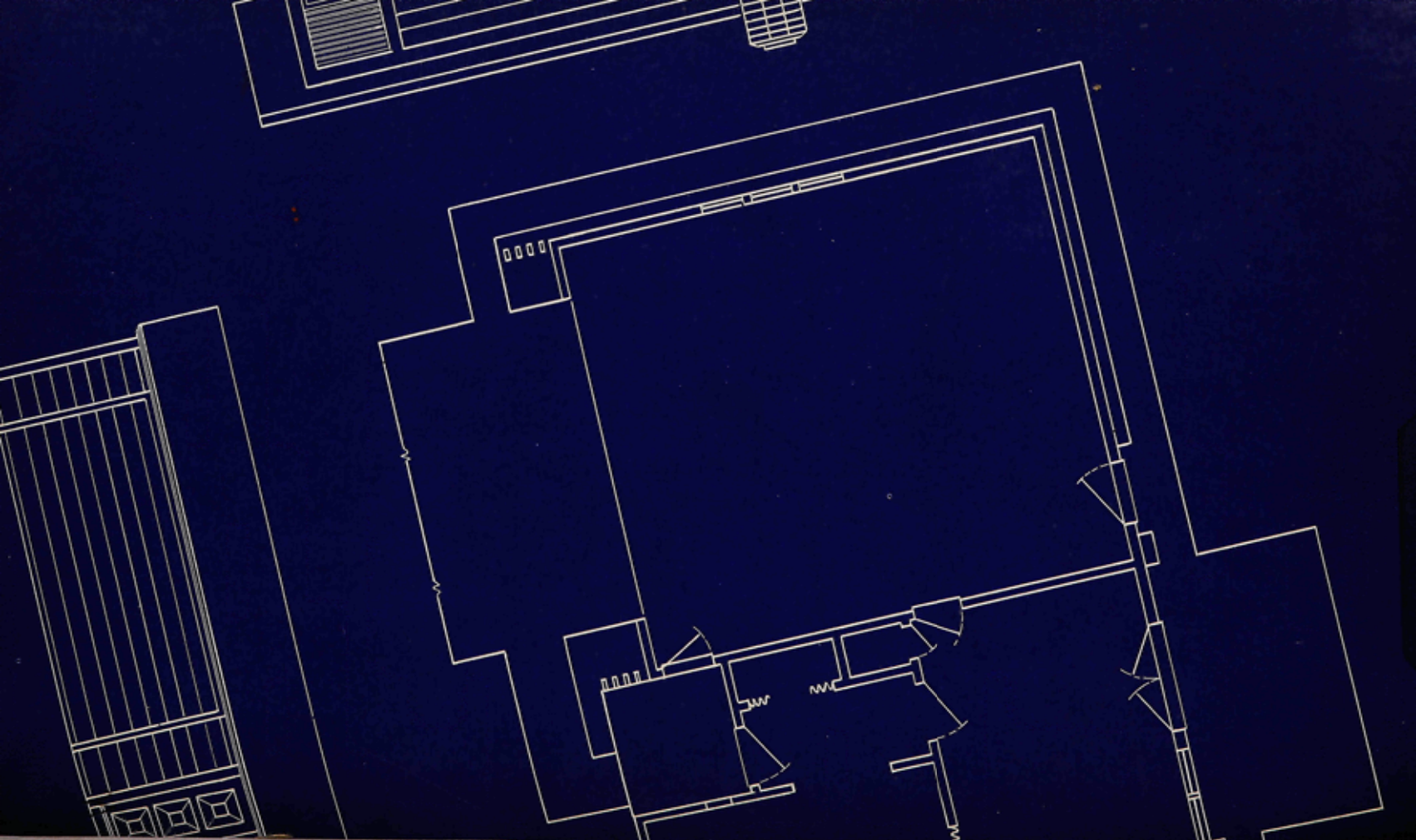
For sale by the Superintendent of Documents, U. S. Government Printing Office
Washington 25, D. C. - Price 65 cents