A281.9
Ag8A
Copy 2

United States
Department of
Agriculture

Economic
Research
Service

Agricultural
Economic
Report
Number 636

Food Cost Review, 1989

Denis Dunham

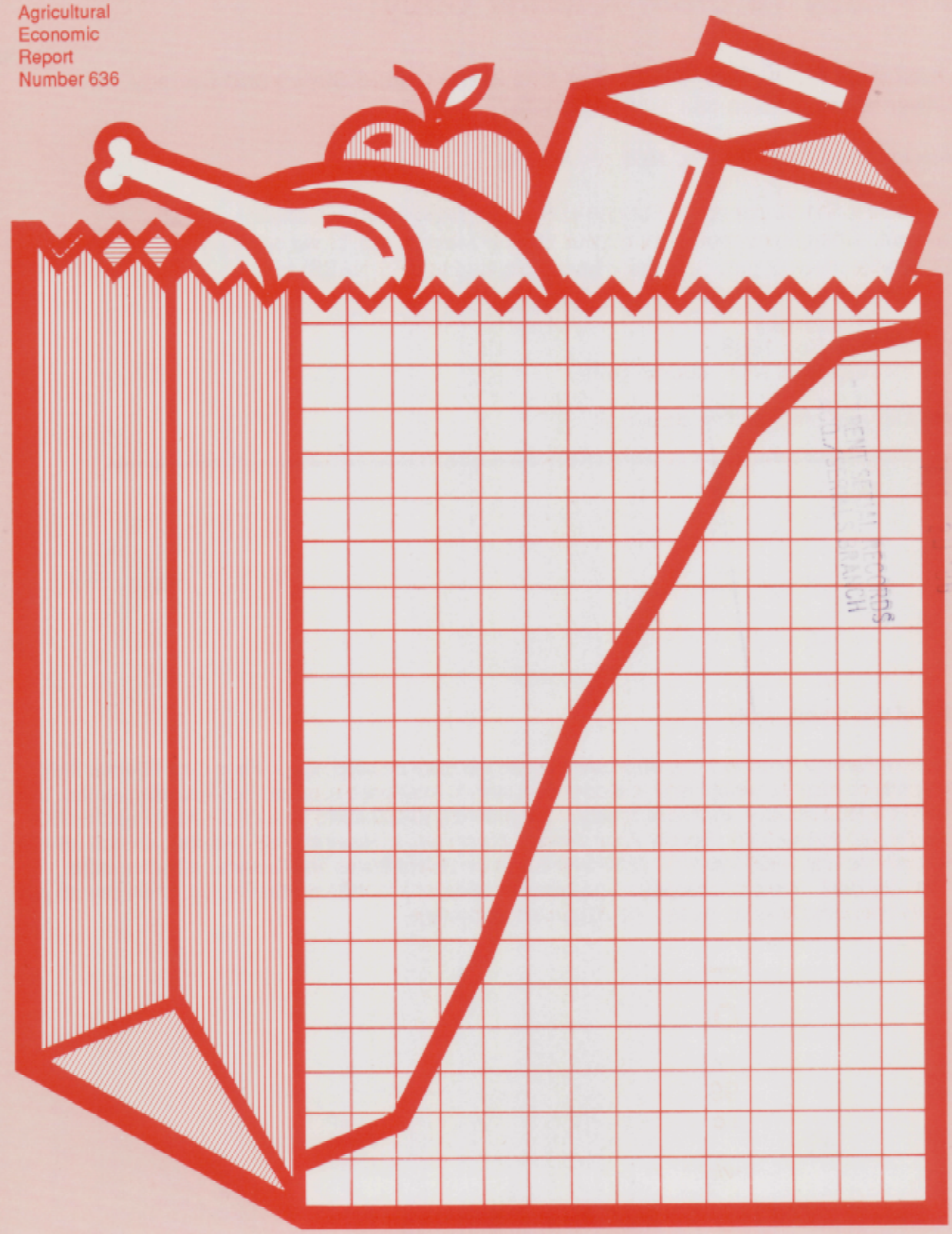

USDA
LIBRARY
RECEIVED

It's Easy To Order Another Copy!

Just dial 1-800-999-6779. Toll free in the United States and Canada. Other areas, please call 1-301-725-7937.

Ask for ***Food Cost Review, 1989*** (AER-636).

The cost is $11.00 per copy. For non-U.S. addresses (includes Canada), add 25 percent. Charge your purchase to your VISA or MasterCard, or we can bill you. Or send a check or purchase order (made payable to ERS-NASS) to:

ERS-NASS
P.O. Box 1608
Rockville, MD 20849-1608.

We'll fill your order by first-class mail.

For a summary of this report, order . . .

Food Costs. . . From Farm to Retail in 1989, which summarizes the more detailed report, *Food Cost Review, 1989.* The summary reports on recent developments in food prices, farm-to-retail price spreads, food spending, profits, and marketing costs in the food industry. Purchase copies of the summary ($4.00 each) from ERS-NASS Reports, P.O. Box 1608, Rockville, MD 20849-1608. Specify *Food Costs. . .From Farm to Retail in 1989,* AIB-593. Or call, toll free, the ERS-NASS order desk at 1-800-999-6779 (8:30-5:30 ET) in the United States and Canada. All other areas, please dial 1-301-725-7937. You may charge your purchase by telephone to VISA or MasterCard, or we can bill you. Foreign customers (includes Canada), please add 25 percent for postage.

Food Cost Review, 1989. By Denis Dunham, Commodity Economics Division, Economic Research Service, U.S. Department of Agriculture. Agricultural Economic Report No. 636.

Abstract

Food prices, as measured by the Consumer Price Index, increased 5.8 percent in 1989, the largest increase since 1981. Higher farm prices and costs of processing and distribution both contributed to the price increase. The prices farmers received for commodities, as measured by the farm value of USDA's market basket of foods, rose 6.7 percent. This was only the second time in the decade that the rise in farm value equaled or exceeded the rise in food prices. The farm value share of the food dollar spent in grocery stores in 1989 was 30 percent, unchanged from 1988. The farm-to-retail price spread of USDA's market basket of foods rose 7.1 percent, reflecting higher prices of inputs, such as labor and packaging, used by the food industry.

Keywords: Retail food prices, farm-to-retail price spread, farm value share, food marketing costs, food spending, profit, productivity

Acknowledgments

Lawrence Duewer, Joan Pearrow, James Miller, and Lee Christensen provided cost data for individual commodities, Howard Elitzak provided marketing bill data, and T.Q. Hutchinson provided transportation information. The author also thanks Harry Harp for his helpful ideas, Betty Barrett for typing the report, and Teri Davis Thrash for editorial assistance.

Washington, DC 20005-4788 July 1990

Contents

	Page
Summary	iii
Introduction	1
Retail Food Prices	1
Consumer Price Index	4
Retail Prices of Food Groups	4
Food Consumption	8
Market Basket Prices	10
Farm Value	10
Farm Value Share of Food Dollar	14
Farm-to-Retail Price Spread	14
A Look Back at the 1980's	20
Food Industry Costs, Profits, and Productivity	21
Prices of Marketing Inputs	21
Financial Ratios	29
Labor Productivity	30
Food Spending: How It Was Distributed	32
Food Expenditures	34
Farm Value	36
Marketing Bill	36
What the Marketing Bill Bought	38
Food Spending in Relation to Income	44
Food Price Highlights	44
Choice Beef	46
Pork	48
Broilers	49
Eggs	49
Fluid Milk	51
Fruit and Vegetables	52
Bread	55
Sugar	56

Summary

Consumers paid 5.8-percent higher prices for food in 1989, as measured by the Consumer Price Index (CPI). This increase exceeded the 4.1-percent rise of 1988, and was the largest since 1981. The larger rise in prices was partly caused by lingering effects of the 1988 drought, which raised ingredient costs of many foods and livestock feeds. The higher ingredient costs affected grocery store prices the most, where prices advanced 6.5 percent, up from 4.2 percent in 1988. Restaurant meal prices went up 4.6 percent, only fractionally more than a year earlier. Greater increases in food processing and distribution costs and stronger consumer demand contributed to the higher food prices.

Farm prices of food commodities in 1989, boosted by higher poultry, egg, and milk prices, rose by as much as retail food prices for only the second time in the decade. The farm value of USDA's market basket of foods, based on prices farmers received, rose 6.7 percent, reflecting price strength brought on by the drought of 1988. The 1989 increase in the farm value of food was the largest since 1984, when farm prices of citrus and soybeans rose sharply due to the previous year's drought and freeze damage to these crops.

The 1989 farm value averaged 30 percent of the retail cost for a market basket of food purchased in grocery stores, the same share as in 1988. This stability contrasts with most other years of the 1980's, when abundant food supplies held down farm prices, while rising processing and distributing charges boosted retail prices. These opposing forces caused a decline in the average farm share from 37 percent to 30 percent during the 1980's.

The farm-to-retail price spread rose 7.1 percent in 1989, reflecting higher prices of marketing inputs, including labor, packaging, and advertising. In addition, there likely was greater use of some inputs per unit of output. For instance, hours worked in food retailing increased about 2 percent per year in the 1980's, reflecting more service departments in supermarkets, such as instore bakeries and delicatessens. A major increase in the debt load of companies involved in merger and acquisition activity also greatly increased interest expense.

Consumers spent $423 billion for food produced on U.S. farms in 1989, about 6 percent more than in 1988. This amount includes purchases of farm foods in grocery stores, about 61 percent of the total, and at away-from-home eating places. About 24 percent of last year's food spending went back to farmers, who received about $103 billion for food commodities. This share is lower than the 30-percent farm value share for the market basket of foods because it includes the much lower 16-percent farm share for away-from-home food spending.

For food--	1988	1989
	Billion dollars	
Consumers spent...	399	423
Marketing bill was...	302	320
Farmers got...	97	103

The remaining $320 billion--the marketing bill--went to the food industry for handling, processing, and retailing foodstuffs after they left the farm. The marketing bill rose $18 billion in 1989. Direct labor costs for food marketing represented 46 percent of the marketing bill. Labor costs were about 43 percent larger than the farm value of food commodities.

Although the dollar amount spent for food continues to rise, food spending as a percentage of disposable personal income declined over the past decade. In 1989, personal expenditures for food, as estimated by the Economic Research Service, were 11.8 percent of personal disposable income, down from 12.9 percent 5 years earlier and 13.9 percent in 1979.

Food Cost Review, 1989

Denis Dunham*

Introduction

Consumers, farmers, and legislators want to know what causes food prices to change. They are also interested in the difference between what farmers get for the food they sell and how much consumers pay for that food, commonly referred to as the farm-to-retail price spread. To answer these concerns, Congress has directed the U.S. Department of Agriculture (USDA) to measure price spreads for food originating on farms.

This report presents USDA's findings for 1989, including answers to the following questions:

- How much did food prices rise in 1989? Why?
- How much of the retail food price does the farm value represent?
- How did farm-to-retail price spreads change last year, both for a market basket of food and for such representative food as Choice beef or bread?
- How have recent developments affected food industry costs, profit margins, and productivity?
- Finally, how much did Americans spend for farm-produced food, and how were these dollars divided among costs of producing and marketing food?

Retail Food Prices

Retail food prices rose more last year than in most other years in the decade. Food prices in 1989 averaged 5.8 percent above those in 1988, up from the 4.1-percent rise in 1988. The 1989 price increase was the largest since 1981, and was due, in part, to the lingering effects of the 1988 drought, which reduced crop carryover supplies and raised ingredient costs of many food items and livestock feeds (table 1).

*The author is an agricultural economist in the Commodity Economics Division, Economic Research Service, U.S. Department of Agriculture.

The two components of the food index--food sold in grocery stores for use at home and meals and snacks consumed away from home--advanced by much different rates for 1989. Food prices in grocery stores climbed 6.5 percent, up from 4.2 percent in 1988. Price increases for most food categories were larger in 1989 (table 2). Raw product cost increases affect grocery store food prices more than they affect restaurant meal prices, which only rose 4.6 percent, 0.5 percentage point more than a year earlier.

Farm prices, costs for processing and distributing food, and consumer demand, the major factors influencing food prices, all helped to push food prices higher last year. Consumer demand was bolstered by a 3-percent increase in real disposable personal income. This increase in income in 1989 was slightly smaller than in 1988, but was the third largest gain in the 1980's. Strong demand and tighter supplies of some food commodities, which resulted partly from the 1988 drought and partly from weather disruptions in the first half of 1989, pushed up farm prices of commodities. There was also a large increase in the farm-to-retail price spread for food sold through grocery stores, reflecting higher charges for processing and distributing food.

For the third year in the past four, average food prices in 1989 rose more than average prices for all consumer products and services. Housing, at 3.8 percent, went up much less than food; prices of apparel and upkeep rose only 2.8 percent, but medical care costs went up 7.7 percent. Overall inflation averaged 4.8 percent in 1989, up from 4.1 percent in 1988 (fig. 1).

Figure 1

Consumer Price Indexes

Food led all items in the 1970's but lagged all items in the 1980's until recent years.

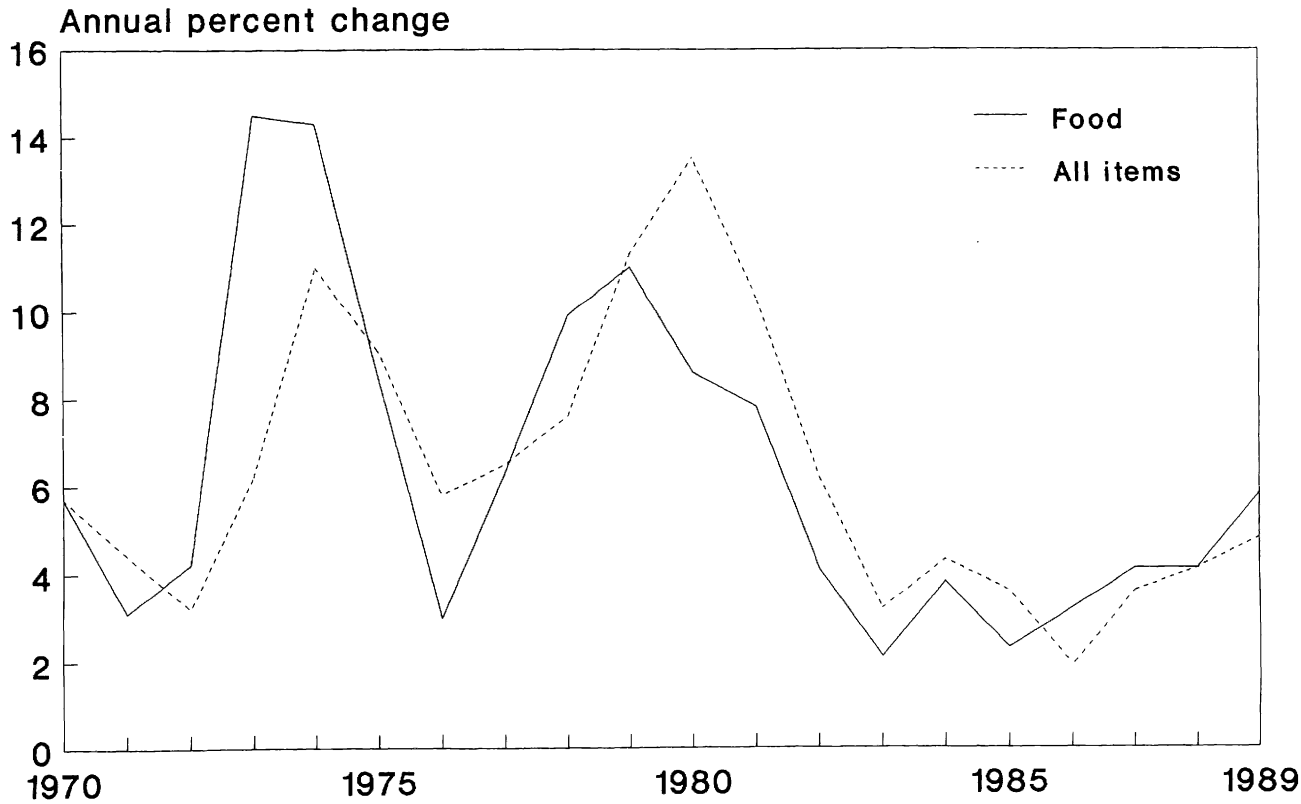

Table 1--Consumer Price Indexes for food and percentage change from previous year

Year	Food		Food at home		Food away from home	
	Index	Change	Index	Change	Index	Change
	1982-84=100	Percent	1982-84=100	Percent	1982-84=100	Percent
1972	42.1	4.2	42.7	4.4	41.0	4.1
1973	48.2	14.5	49.7	16.4	44.2	7.8
1974	55.1	14.3	57.1	14.9	49.8	12.7
1975	59.8	8.5	61.8	8.2	54.5	9.4
1976	61.6	3.0	63.1	2.1	58.2	6.8
1977	65.5	6.3	66.8	5.9	62.6	7.6
1978	72.0	9.9	73.8	10.5	68.3	9.1
1979	79.9	11.0	81.8	10.8	75.9	11.1
1980	86.8	8.6	88.4	8.1	83.4	9.9
1981	93.6	7.8	94.8	7.2	90.9	9.0
1982	97.4	4.1	98.1	3.5	95.8	5.4
1983	99.4	2.1	99.1	1.0	100.0	4.4
1984	103.2	3.8	102.8	3.7	104.2	4.2
1985	105.6	2.3	104.3	1.5	108.3	3.9
1986	109.0	3.2	107.3	2.9	112.5	3.9
1987	113.5	4.1	111.9	4.3	117.0	4.0
1988	118.2	4.1	116.6	4.2	121.8	4.1
1989	125.1	5.8	124.2	6.5	127.4	4.6

Source: U.S. Department of Labor, Bureau of Labor Statistics.

Table 2--Consumer Price Index changes by food group

Food group	1985	1986	1987	1988	1989
	Percentage change from year earlier				
Food at home	1.5	2.9	4.3	4.2	6.5
Cereal and cereal products	3.9	3.0	3.2	7.6	9.2
Bakery products	3.8	2.7	3.5	5.9	8.0
Beef and veal	-2.1	.6	7.6	-3.0	6.4
Pork	.3	8.2	8.2	-3.0	.6
Other meat	.7	2.6	6.3	2.6	2.8
Poultry	-1.0	7.5	-1.4	7.2	9.9
Eggs	-16.6	6.8	-5.9	2.3	26.6
Fish and seafood	4.9	9.2	10.6	5.8	4.5
Dairy products	1.9	.1	2.5	2.4	6.6
Fresh fruit	10.1	2.1	11.2	8.3	6.6
Fresh vegetables	-4.3	4.1	12.9	6.3	10.7
Processed fruit	4.1	-2.9	4.0	10.3	3.2
Processed vegetables	1.1	-.2	2.8	4.8	10.7
Fats and oils	2.2	-2.2	1.5	4.6	7.2
Sugar and sweets	2.5	3.0	1.8	2.7	4.7
Nonalcoholic beverages	2.0	5.8	-2.6	0	3.5
Other prepared food	3.3	2.6	4.2	3.7	6.4

Source: U.S. Department of Labor, Bureau of Labor Statistics.

Consumer Price Index

The Consumer Price Index for urban consumers (CPI-U), published by the U.S. Department of Labor's Bureau of Labor Statistics (BLS), is the most widely accepted measure of changes in retail food prices. Prices used to develop the food CPI-U are collected in about 2,300 foodstores located in 85 urban areas.

After collecting the prices, the BLS summarizes them, weights them by their importance, and reports the prices as index numbers for about 70 food groups. The weights, reflecting the purchasing patterns of urban households, are periodically revised. The BLS made the latest revision in January 1987, for changes in purchasing patterns between 1972-73 and 1982-84.

The food component of the overall CPI-U has a weight of about 16 percent; housing is the largest expenditure category with 42 percent of the CPI-U weight, followed by transportation with 17 percent. The food category of the CPI-U has two major components: food purchased in foodstores for consumption at home, which has a weight of about 10 percent, and food consumed away from home, weighted at about 6 percent (table 3).

Knowing the importance of CPI-U components helps one understand how price changes for various food groups influence the overall change in the CPI-U for food. For instance, in the food-at-home CPI-U, meat is the largest major food category. Last year, the CPI-U for meat went up 4 percent, accounting for about 12 percent of the increase in the food-at-home CPI-U.

Retail Prices of Food Groups

Prices of most foods at the supermarket averaged higher in 1989 (tables 2 and 4). However, price changes varied widely among the various food groups. Prices of eggs rose the most, up by 26.6 percent. Because of lingering effects of the 1988 drought and strong demand, price increases were above average also for fresh vegetables (10.7 percent), poultry (9.9 percent), cereal and bakery products (8.4 percent), and fats and oils (7.2 percent). Following many years of small price increases, prices of dairy products rose 6.6 percent. Of the major food categories, prices went up the least for nonalcoholic beverages (coffee and soft drinks). Here's a wrapup of price changes at the supermarket in 1989.

Meat

Beef and veal prices rose 6.4 percent in 1989. The price increase likely was due to a large decrease in the per capita supply of beef. Beef and veal consumption was 66 pounds (boneless weight) per capita in 1989, 3.3 pound less than in 1988. Retail pork prices averaged only 0.6 percent higher in 1989, following a 3-percent decline in 1988. Per capita consumption of pork dropped slightly to about 44 pounds (boneless weight).

Poultry and Eggs

Retail poultry prices averaged 9.9 percent higher in 1989, reflecting nearly similar price increases for both chicken and turkey. Prices for chicken in grocery stores were boosted by major purchases of chicken by fast-food chains that added and promoted chicken items on their menus. Broiler chicken production increased about 7 percent in 1989, extending the long-term expansion of the 1980's, and turkey production was up about 6 percent. As a

Table 3--Relative importance of food groups in Consumer Price Index for urban consumers, December 1989

Food group	Weight in CPI-U	Weight in food CPI-U	Weight in food-at-home CPI-U
		Percent	
Food	16.318	100.0	NA
Food at home	10.129	62.1	100.0
Cereal and bakery products	1.440	8.8	14.2
Cereal products	.463	2.8	4.5
Bakery products	.978	6.0	9.7
Meat	2.057	12.6	20.3
Beef and veal	1.065	6.5	10.5
Pork	.583	3.6	5.8
Other meats	.409	2.5	4.0
Poultry	.463	2.8	4.5
Fish and seafood	.385	2.4	3.9
Eggs	.214	1.3	2.1
Dairy products	1.296	8.0	12.8
Fresh milk and cream	.651	4.0	6.4
Processed dairy products	.645	4.0	6.4
Fresh fruit and vegetables	1.150	7.1	11.4
Fresh fruit	.612	3.8	6.1
Fresh vegetables	.537	3.3	5.3
Processed fruit and vegetables	.663	4.1	6.6
Processed fruit	.377	2.3	3.7
Processed vegetables	.286	1.8	2.9
Sugar and sweets	.348	2.1	3.4
Fats and oils	.267	1.6	2.6
Nonalcoholic beverages	.797	4.9	7.9
Other prepared food	1.050	6.4	10.3
Food away from home	6.189	37.9	NA

NA = Not applicable.
Source: U.S. Department of Labor, Bureau of Labor Statistics.

Table 4--Average retail food prices, selected items

Item	Unit	1985	1986	1987	1988	1989
		Dollars				
Flour, white	Pound	0.21	0.21	0.20	0.21	0.24
Rice, white, uncooked	do.	.47	.45	.40	.48	.50
Spagetti and macaroni	do.	.74	.74	.73	.80	.86
Bread, white	do.	.55	.56	.55	.61	.66
Bread, french	do.	1.02	1.05	1.08	1.09	1.17
Cookies, chocolate chip	do.	1.94	1.99	2.00	2.12	2.38
Crackers, soda	do.	1.02	.99	1.00	1.07	--
Ground beef	do.	1.24	1.23	1.31	1.36	1.44
Chuck, ground	do.	1.68	1.63	1.63	1.76	1.83
Chuck roast, bone-in	do.	1.57	1.58	1.68	1.73	1.88
Round roast, boneless	do.	2.46	2.44	2.53	2.63	2.69
Rib roast	do.	3.28	3.26	3.54	3.89	4.17
Round steak, boneless	do.	2.82	2.77	2.88	2.98	3.12
Sirloin steak, bone-in	do.	2.96	2.96	3.13	3.29	3.58
T-bone steak	do.	3.97	3.97	4.24	4.72	5.07
Bacon, sliced	do.	1.94	2.08	2.14	1.88	1.77
Chops, center cut	do.	2.34	2.59	2.82	2.77	2.85
Ham, rump	do.	1.28	1.47	1.54	1.60	--
Shoulder picnic	do.	1.02	1.06	1.11	1.12	1.10
Sausage	do.	1.74	1.91	1.99	1.97	2.00
Ham, canned	do.	2.56	2.68	2.80	2.73	2.67
Frankfurters	do.	1.81	1.93	1.99	2.02	2.06
Bologna	do.	2.11	2.17	2.19	2.24	2.28
Chicken, fresh, whole	do.	.76	.84	.78	.85	.93
Chicken breast	do.	1.66	1.85	1.80	1.93	2.09
Chicken legs	do.	1.08	1.17	1.09	1.14	1.21
Turkey, frozen	do.	1.05	1.07	1.01	.96	.99
Tuna, canned	do.	2.01	2.00	1.97	2.16	2.08
Eggs, Grade A, large	Dozen	.80	.87	.78	.79	1.00
Milk, fresh, whole	1/2 gal.	1.13	1.11	1.14	1.16	1.27
Milk, low fat	1/2 gal.	1.08	1.08	1.08	1.11	--
Butter	Pound	2.12	2.15	2.17	2.16	2.13
Ice cream	1/2 gal.	2.30	2.36	2.46	2.46	2.60
Yogurt	1/2 pt.	.57	.58	.58	.59	--
Cheese, cheddar	Pound	3.09	3.05	3.06	3.17	3.20
Cheese, processed	do.	2.53	2.60	2.67	2.78	2.93

Item	Unit	1985	1986	1987	1988	1989
		Dollars				
Apples, red delicious	Pound	0.68	0.77	0.73	0.73	0.69
Bananas	do.	.37	.38	.36	.42	.45
Oranges, navel	do.	.53	.48	.54	.53	.52
Oranges, Valencia	do.	.54	.46	.58	.59	.60
Cherries	do.	1.62	1.27	1.35	1.63	1.15
Grapefruit	do.	.47	.51	.52	.52	.52
Grapes, Thompson seedless	do.	.94	1.14	1.17	1.16	1.20
Lemons	do.	.93	.82	.90	.93	.92
Peaches	do.	.69	.68	.67	.68	.84
Pears, Anjou	do.	.70	.75	.74	.63	.73
Strawberries	12 oz.	.83	.83	.96	1.00	1.04
Potatoes, white	Pound	.21	.53	.28	.26	.34
Lettuce, iceberg	do.	.54	.53	.62	.63	.60
Tomatoes, field grown	do.	.78	.82	.82	.83	.91
Beans, green	do.	.82	.87	.94	.96	1.02
Cabbage	do.	.29	.31	.30	.33	.36
Carrots	do.	.36	.38	.36	.38	.40
Celery	do.	.42	.47	.46	.51	.53
Corn on the cob	do.	.39	.41	.42	.59	--
Cucumbers	do.	.51	.51	.57	.57	.66
Onions, yellow	do.	.30	.31	.42	.38	.36
Peppers, sweet	do.	.94	.90	.90	.79	.96
Orange juice, frozen concentrated	16 oz.	1.75	1.54	1.53	1.82	1.86
Potatoes, frozen, french fried	Pound	.71	.70	.69	.70	.75
Tomatoes, canned	do.	.52	.52	.51	.53	--
Margarine, tub	do.	1.02	1.02	.97	1.04	1.17
Margarine, stick	do.	.80	.79	.69	.73	.82
Shortening	do.	.88	.87	.78	.85	.93
Peanut butter	do.	1.54	1.60	1.80	1.79	1.81
Potato chips	do.	2.61	2.68	2.75	2.62	2.86
Sugar, white	do.	.35	.35	.35	.37	.40
Coffee, roasted	do.	2.58	2.43	2.78	2.77	3.07
Cola, nondiet, cans	16 oz.	.49	.47	.44	.43	--

-- = Not available.

Source: U.S. Department of Labor, Bureau of Labor Statistics.

consequence, poultry consumption increased to 60.5 pounds (boneless weight) per person in 1989, 3.4 pounds more than in 1988.

Discouraged by losses in 1988 and faced with higher feed costs following the 1988 drought, egg producers reduced production about 4 percent in 1989, causing egg prices to rise. Retail egg prices soared an average of 26.6 percent, partly reflecting the typically large price response of about 4 percent for each 1-percent change in supply. However, the 1989 price increase appears too large to result from supply alone. Some of the increase reflects continued strong demand for eggs in processed form. But total per capita consumption dropped from 246 eggs to 236 eggs because of lower table egg use, continuing a long-term trend.

Dairy Foods

Retail prices of milk and other dairy products averaged 6.6 percent higher in 1989. Price increases were slightly larger for cheese (7.7 percent) and for fresh milk (7.5 percent) than for ice cream (4.9 percent) and other processed products. The 1989 increase in dairy prices was the largest since 1981, and was a sharp contrast to the 1- or 2-percent annual increase during most of the 1980's. The sharp price rise in 1989 was largely caused by low stocks of cheese and nonfat dry milk compared with domestic use and exports. Commercial cheese sales were strengthened by smaller Government cheese donations. Milk production also declined nearly 1 percent in 1989.

Fish and Seafood

Prices of seafood increased 4.5 percent in 1989, the smallest increase in 5 years. Prices were moderated by larger imports of haddock, cod, and most other fish, as well as canned tuna. Consumption of seafood has been rising, reaching a record 15.7 pounds per capita in 1989. Fresh and frozen seafood accounts for about two-thirds of total consumption and has increased the most in price.

Cereal and Bakery Products

Retail prices for cereal and bakery products averaged 8.4 percent higher in 1989. The increase can be partly attributed to price increases for wheat and other food grains, corn sweeteners, and vegetable shortening following the 1988 drought. The 1989 farm value of commodities used in cereal and bakery products averaged about 40 percent higher than in 1987. However, the higher farm value was not the only cause of rising retail prices. Bakers and cereal manufacturers increased prices to cover higher packaging, labor, and other business costs.

Annual cereal price increases were large in other years of the 1980's, reflecting higher manufacturing and selling costs and strong consumer demand shown by robust growth in consumption. Per capita consumption of ready-to-eat cereals rose 14 percent from 1980 to 1988.

Processed Fruit and Vegetables

Processed fruit and vegetable prices in 1989 averaged 6.3 percent higher than 1988 prices. Much of the increase was in prices for processed vegetables, which rose 10.7 percent. Higher prices were mainly attributed to tight supplies of canned corn, peas, green beans, and dried beans following the 1988 drought.

Fats and Oils

The fats and oils component of the food CPI-U averaged 7.2 percent higher in 1989. Margarine prices rose 10 percent, while peanut butter prices were up only 1.3 percent. Retail prices rose mainly because of cost increases for raw soybean oil, the principal ingredient of margarine and other oil products, that carried over into 1989.

Fresh Fruit and Vegetables

Fresh fruit prices averaged 6.6 percent higher in 1989. Prices of bananas, the fresh fruit consumed in largest quantity, rose 10 percent, partly reflecting a sharp price rise in the spring, when Chilean grapes were removed from stores and concern surfaced over Alar residues in apples. U.S. imports of bananas rose 2.5 percent in 1989. Apple prices averaged 4.7 percent higher in 1989, reflecting a 15-percent smaller 1988 harvest. However, apple prices were depressed, particularly at the grower level for Washington red delicious, following the public concern about Alar residues. Citrus production was larger in 1989, but use of oranges and several other fruits for fresh market was stable because of increased fruit processing. Both orange and grapefruit prices rose slightly in 1989.

Fresh vegetable prices rose 10.7 percent. Retail prices for fresh potatoes rose dramatically (28.9 percent), boosted by a drought-induced 10-percent crop reduction in 1988. Another factor contributing to the price strength was strong demand from processors for potatoes to produce french fries. Rising use of french fries by fast-food firms, development of frozen microwavable products, and larger U.S. exports have provided an expanding market for potatoes.

Nonalcoholic Beverages

Nonalcoholic beverage prices were up 3.5 percent in 1989. Coffee prices were 4.7 percent higher, although a steep midyear decline in green coffee-bean prices caused small declines in retail prices late in 1989. Carbonated drink prices went up 2.6 percent, the first increase in 3 years. Price competition for market share among soft-drink companies and industry productivity gains averaging 6.5 percent per year in the 1980's are likely reasons for the small retail price increases.

Food Consumption

Preliminary estimates indicate that there was a decline in total food consumption in 1989, as measured by USDA's per capita food consumption index. This index, calculated from pounds of food and retail prices in a base year, probably went down about 1 percent last year, mainly because of reduced consumption of beef and dairy products (table 5). Prior to 1989, the index had increased about 1 percent annually since 1982. The index includes most foods, but it does not represent total food use because data are not available for some fruit, vegetables, and other products. Food consumption data are derived from information on supply and use of farm products and, therefore, are not direct measures of consumption. Rather, they measure disappearance of food from commercial channels.

Beef and veal consumption declined 3 pounds to 66 pounds per person on a boneless-weight basis in 1989. Pork consumption declined about one-half pound

to 44 pounds per person. But per capita poultry consumption continued its long upward trend, increasing about 3.5 pounds to 60.5 pounds, boneless weight. The use of dairy products declined about 17 pounds on a milk-equivalent basis, mostly because of smaller Government donations in 1989. Per capita consumption of fresh fruit and vegetables changed little in 1989, but there has been an upward trend over the last 10 years. In 1989, consumption of flour and cereals likely increased further, but the use of fats and oils may have declined slightly, reflecting health concerns about the level of fat in the diet.

Consumers have been altering their consumption of major food groups, such as meat and poultry. Over the past decade, red meat consumption dropped 11 pounds per person, boneless weight. Beef and veal consumption fell 9 pounds per person from 1979 to 1989, and per person pork consumption fell 2 pounds. Egg consumption declined about 14 percent. Poultry consumption jumped 18 pounds. While this change in consumption patterns may result partly from health concerns, low prices and greater use of poultry in fast-food outlets remain major causes for consumption trends.

Dairy product consumption rose in the mid-1980's, reflecting declining real prices and expanding promotion. Consumption of dairy products declined in the past 2 years, mainly because of reduced Government donations.

Table 5--Annual per capita food consumption 1/

Food group	1979	1986	1987	1988	1989 2/
		1982-84=100			
Aggregate food consumption index	99.2	105.0	105.4	105.7	104.4
		Pounds per capita			
Red meat, boneless and trimmed	122	118	113	115	111
Beef and veal	75	76	71	69	66
Pork	46	42	42	45	44
Poultry, boneless	42	51	55	57	60
Eggs	35	32	32	31	30
Fish and shellfish, boneless	13	14	15	15	16
Dairy products, milk equivalent	548	590	598	581	564
Flour and cereal products	153	164	170	172	174
Fats and oils, including butter	56	64	63	63	61
Fresh fruit	80	92	97	94	95
Fresh vegetables 3/	71	85	89	90	90
Potatoes, fresh and processed	74	78	76	81	74
Sugars and sweeteners, caloric	127	130	132	133	133

1/ Data are on a retail-weight basis, except as noted. 2/ Preliminary. 3/ Data are for lettuce, tomatoes, onions, carrots, celery, corn, broccoli, asparagus, and cauliflower.

Source: U.S. Department of Agriculture, Economic Research Service, Food Consumption, Prices, and Expenditures, 1967-88, SB-804, May 1990.

Among crop foods, per capita consumption of fresh fruit rose 15 pounds during 1979-89. The increase is due to expanded consumption of such noncitrus fresh fruit as grapes and bananas. Consumption of eight major commercial fresh vegetables rose 19 pounds per person from 1979 to 1989, mainly reflecting rising consumption of fresh tomatoes, lettuce, onions, and broccoli.

Consumption of fats and oils has declined 3 pounds per person since 1985, but remains higher than a decade ago. Decreased consumption in recent years has been in animal fats. Caloric sugar and sweetener consumption rose from 127 pounds per person in 1979 to 133 pounds in 1989, mainly reflecting greater use of corn sweeteners in soft drinks.

Market Basket Prices

To better understand why grocery store food prices increased last year, we consider separately what happened to the prices that farmers received for food commodities and what happened to charges for marketing services.

USDA uses its market basket concept to separate these two components of food prices. The market basket contains the average quantities of food that mainly originate on U.S. farms purchased for consumption at home in a base period. It does not include fish and seafood and nonalcholic beverages. Changes in retail prices of the market basket are components of the CPI-U for food consumed at home.

USDA divides the retail cost for a market basket of food into the farm value and the farm-to-retail price spread (table 6). The farm value represents prices farmers receive for raw commodities equivalent to foods in the market basket. The farm-to-retail price spread represents the difference between the retail price and the farm value. The price spread includes the charges for assembling foods from farms, and for processing, distributing, and retailing foods. In each of the past 10 years, a rise in the farm-to-retail price spread contributed more to the rise in food prices than did changes in the farm value.

Farm Value

Farm value is a measure of the return, or payment, received by farmers for the farm products equivalent to retail food sold to consumers. Market basket farm value serves as an index of prices farmers receive for products later used for food. Farm values for individual food items are expressed in dollar amounts for comparison with the item's retail price. Farm value is calculated by multiplying farm prices by the quantities of farm products equivalent to food sold at retail. An allowance is made in farm values if byproducts are obtained in processing. The farm value usually represents a larger quantity than the retail unit, because the foodstuffs that farmers produce lose weight through storage, processing, and distribution.

The farm product equivalent varies among foods. Only a slight amount of raw milk is lost, for example, as it is handled and processed for sale in cartons to consumers. Therefore, the farm value per retail half-gallon is just a little more than the price that milk producers receive per half-gallon. In contrast, nearly 2.4 pounds of live animal yield 1 pound of Choice beef on the meat counter. The payment the cattle producer receives for that larger

Table 6--Indexes of retail price, farm value, and the farm-to-retail price spread and farm value as a share of retail price 1/

Year	Retail price	Farm value	Farm-to-retail spread	Farm value share of retail price
	----------1982-84=100----------			Percent
1950	30	40	25	47
1951	33	46	26	49
1952	34	44	28	47
1953	32	41	28	45
1954	32	39	28	43
1955	31	36	29	41
1956	32	36	29	40
1957	33	37	30	40
1958	35	40	32	41
1959	34	37	32	39
1960	34	38	32	39
1961	34	37	33	39
1962	34	38	33	39
1963	34	36	33	38
1964	34	36	34	36
1965	35	40	33	38
1966	37	43	34	39
1967	37	40	35	39
1968	38	42	36	38
1969	40	46	37	39
1970	42	46	40	37
1971	43	46	41	37
1972	45	50	42	38
1973	52	68	45	44
1974	60	73	53	42
1975	64	76	58	40
1976	65	72	61	38
1977	66	72	63	37
1978	74	83	68	38
1979	82	92	77	38
1980	88	97	84	37
1981	95	100	92	36
1982	98	99	98	35
1983	99	97	100	34
1984	103	104	103	35
1985	104	96	108	32
1986	106	95	112	31
1987	112	97	120	30
1988	116	100	125	30
1989 2/	125	107	134	30

1/ For a market basket of foods bought in foodstores in a base period, currently 1982-84. The retail price index is derived from data from the U.S. Department of Labor, Bureau of Labor Statistics. Farm value is based on prices received by farmers for commodities. The spread between the retail price and farm value represents charges for processing and marketing.
2/ Preliminary.

quantity of live animal is the gross farm value in the price of 1 pound of retail beef.

The farm value of foods in the market basket averaged 6.7 percent higher in 1989, largely due to higher poultry, egg, and milk prices. Farm value in 1989 demonstrated the strength in commodity prices brought on by the 1988 drought. The 1989 increase in farm value was the largest since 1984, when farm prices of citrus and soybeans rose sharply due to the previous year's drought and freeze damage to crops.

The farm value of cereal and baked goods rose 10 percent in 1989, reflecting higher prices of wheat and rice (table 7). Farmers received about 4.8 cents for the wheat in a 1-pound loaf of white bread selling for 66 cents in supermarkets, 0.6 cent more than in 1988. The farm value of other bread ingredients, mainly shortening and sweeteners, was 0.7 cent, up from 0.6 cent in 1988. The farm value of sweeteners jumped 14 percent.

While poultry producers continued to increase broiler and turkey output, prices rose sharply through the spring. Production in 1989 increased more than 6 percent, up from a 4-percent gain in 1988. Despite this larger output, rising poultry demand increased farm value more than 7 percent. Broiler chicken producers received 51 cents of the average retail price of 93 cents per pound of frying chicken in 1989, about 3 cents more than in 1988.

Red meat accounts for about 33 percent of the farm value of USDA's market basket. Farmers received 3.8-percent higher prices for red meat in 1989 than in 1988, mainly reflecting 4-percent higher steer cattle prices and 1.5-percent higher hog prices. For 1 pound of Choice grade beef selling for an average retail price of $2.70, cattle producers received $1.55 for the equivalent quantity of live animal (2.4 pounds) in 1989, or 8 cents more than in 1988. This increase reflected a 2-percent decline in beef production. In contrast, pork supplies were slightly larger, but had little effect on farm value. For 1 pound of pork selling at retail for $1.83 in 1989, hog producers received 70 cents for the equivalent quantity of live animal (1.7 pounds), 1 cent more than in 1988.

Higher producer prices for milk increased the farm value of dairy products by more than 9 percent. A half-gallon of milk retailing for $1.27 returned the producer about 59 cents in 1989, 5 cents more than in 1988.

Farm value of fresh vegetables, led by much higher grower prices for potatoes, averaged about 17 percent higher for calendar year 1989. Considerable variation has occurred over the years because sharp monthly changes in grower prices of potatoes, lettuce, tomatoes, and most other fresh vegetables are common in response to the effects of weather and other output factors. In 1989, farm value of potatoes increased 77 percent, reflecting a 10-percent crop reduction in 1988, due to the drought, and strong demand for potatoes for processing into frozen products. While there has been considerable variation, the farm value of fresh vegetables has trended upward about 6 percent per year since 1980, compared with a rise of about 7 percent annually in the CPI for fresh vegetables.

Farm value of fresh fruit declined about 6 percent in 1989 but had been steady during the past 4 years. In 1984, farm value increased significantly because a freeze caused a sharp drop in citrus production and a rise in grower prices. Since that freeze, citrus production has gradually recovered and grower prices have been stable. But grower prices for apples sold for fresh market rose

Table 7--Price changes for market basket of foods 1/

Item	1984	1985	1986	1987	1988	1989 2/
			Annual percentage change			
Market basket:						
Retail price	3.9	1.2	2.1	5.0	4.4	7.0
Farm value	6.3	-7.1	-1.4	2.3	3.8	6.7
Farm-to-retail spread	2.8	5.6	3.9	6.1	4.7	7.1
Meat products:						
Retail price	.3	-.9	3.1	7.5	2.4	4.0
Farm value	2.4	-8.2	3.3	7.3	-1.6	3.8
Farm-to-retail spread	-1.7	6.4	2.9	7.7	5.8	4.2
Dairy products:						
Retail price	1.3	1.9	.1	2.5	2.4	6.6
Farm value	-1.2	-4.1	-2.8	.8	-2.9	9.3
Farm-to-retail spread	3.7	7.1	2.5	3.7	6.1	4.9
Poultry:						
Retail price	10.6	-1.0	7.5	-1.4	7.2	9.9
Farm value	16.8	-6.0	8.7	-18.5	17.5	7.2
Farm-to-retail spread	3.6	5.4	6.3	18.4	-1.1	12.4
Eggs:						
Retail price	11.7	-16.6	6.8	-5.9	2.3	26.6
Farm value	11.2	-22.2	7.8	-16.9	-.2	40.5
Farm-to-retail spread	12.9	-6.5	5.6	11.2	5.0	11.2
Cereal and bakery products:						
Retail price	4.3	3.8	2.8	3.5	6.4	8.4
Farm value	1.7	-8.4	-19.1	-7.0	30.6	9.8
Farm-to-retail spread	4.8	5.5	5.4	4.5	4.4	8.3
Fresh fruit:						
Retail price	13.6	11.1	1.7	12.6	7.2	6.4
Farm value	41.1	-2.6	-6.3	9.7	2.3	-6.5
Farm-to-retail spread	3.4	18.0	5.0	13.8	8.9	10.8
Fresh vegetables:						
Retail price	10.9	-4.3	4.1	12.9	6.3	10.7
Farm value	11.8	-14.0	-3.3	24.4	-3.5	17.2
Farm-to-retail spread	10.5	-.6	7.3	8.3	10.7	8.2
Processed fruit and vegetables:						
Retail price	6.0	2.6	-1.6	3.5	7.9	6.3
Farm value	14.3	10.2	-13.8	9.5	23.0	-1.5
Farm-to-retail spread	3.4	.3	2.6	1.8	3.2	9.2
Fats and oils:						
Retail price	9.4	2.2	-2.2	1.5	4.6	7.2
Farm value	29.2	-16.1	-27.0	-2.8	38.5	-7.1
Farm-to-retail spread	2.5	10.4	6.3	2.6	-3.0	11.7
Other prepared food:						
Retail price	3.0	3.3	2.6	4.2	3.7	6.4
Farm value	3.7	-6.7	4.7	2.3	4.8	9.5
Farm-to-retail spread	2.9	4.9	2.3	4.5	3.5	5.9

1/ Changes in retail prices are from the Consumer Price Index published by the U.S. Department of Labor, Bureau of Labor Statistics. The farm value is based on prices received by farmers for commodities equivalent to food at retail. The spread between the retail price and farm value represents charges for processing and marketing. 2/ Preliminary.

sharply between 1984 and 1986 to a record high. But a record 1987 harvest caused grower prices to drop 36 percent from the 1986 peak level. Prices rebounded in 1988, reflecting a 15-percent decline in the apple crop. But in 1989, production increased about 10 percent, causing a decline in grower prices for apples and in the overall farm value of fruit in the market basket.

Farm Value Share of Food Dollar

Farm value averaged 30 percent of the retail price of all foods in the market basket in 1989, the same share as in the previous 2 years (table 5). The farm value share was stable in 1989 because the increase in farm value nearly matched the rise in retail prices. This stability contrasts with the long-term trend. The farm value share of the retail cost of food averaged 38-40 percent most years during the 1960's and 1970's, but trended sharply down from 1979 to 1987 because farm prices did not increase most years. Retail prices continued to rise, however, reflecting higher processing and marketing charges.

Farm value share varies greatly among foods (table 8). Generally, the more highly processed the product is, the smaller the farm share. For example, wheat is the principal ingredient of both flour and bread, but additional manufacturing processes are required for bread. Food derived from animal products tends to have a higher farm value share than those derived from crops because farm inputs are greater for animal products than for crops. Meat production requires two production enterprises: one for feed and the other for livestock. Most other food entails only one production enterprise. Other factors influencing the farm value share among foods include shipping distance from the farm to the consumer and product perishability. These factors may partly explain why the farm value share for California fresh oranges is much lower than that for frozen concentrated orange juice.

The farm value of most foods that come from grains, oilseeds, and fruit and vegetables represents a small share of the retail price. In 1989, farmers received about 9 percent of retail bakery and cereal prices and 21 percent of retail prices of fats and oils (table 9). Because the farm value of these foods is small, the rise in retail prices in 1989, as in most other years, resulted mostly in a widening of the farm-to-retail price spread. For example, the farm value of commodities used in cereal and baked goods rose 10 percent. But this increase generated only about 10 percent of the retail price increase in cereal and baked foods, since the farm value of the ingredients represents only 9 percent of the retail value of these foods. Most of the 8.4-percent increase in retail prices of cereal and baked goods came from higher marketing charges.

Farm-to-Retail Price Spread

The farm-to-retail price spread is the difference between farm value and retail price. It represents payments for all assembling, processing, transporting, and retailing charges added to the value of farm products after they leave the farm. The farm-to-retail spread for the market basket of foods averaged 7.1 percent higher in 1989, a larger increase than in 1988. The increase in the farm-to-retail spread accounted for 71 percent of the 7-percent rise in the retail cost of the market basket.

The increase in the spread reflected higher prices of inputs, such as labor and packaging used in the food industry, and greater use of some inputs per unit of output. The hours of labor used in food retailing have been increased

Table 8--Retail price, farm value, and farm value share for selected foods

Food	Retail price 1988	Retail price 1989 1/	Farm value 1988	Farm value 1989 1/	Farm value share of retail price 1988	Farm value share of retail price 1989 1/
	Dollars				Percent	
Animal products:						
Eggs, Grade A large, 1 doz.	0.79	1.00	0.46	0.65	61	65
Beef, choice, 1 lb.	2.55	2.70	1.47	1.55	58	58
Chicken, broiler, 1 lb.	.85	.93	.48	.51	57	55
Milk, 1/2 gal.	1.16	1.27	.54	.59	46	46
Pork, 1 lb.	1.83	1.83	.69	.70	38	38
Cheese, natural cheddar, 1 lb.	3.16	3.20	1.08	1.20	34	38
Fruit and vegetables:						
Fresh--						
Lemons, 1 lb.	.93	.92	.23	.27	25	29
Apples, red delicious, 1 lb.	.73	.69	.16	.13	22	18
Potatoes, Northeast, 10 lbs.	2.28	3.06	.50	.77	22	25
Oranges, California, 1 lb.	.56	.56	.12	.11	21	19
Grapefruit, 1 lb.	.52	.52	.11	.12	21	23
Lettuce, 1 lb.	.60	.61	.10	.10	17	17
Frozen--						
Orange juice conc., 12 fl. oz.	1.37	1.39	.52	.56	38	40
Broccoli, cut, 1 lb.*	1.11	1.21	.24	.25	22	21
Corn, 1 lb.*	.93	1.07	.12	.12	13	11
Peas, 1 lb.*	.90	1.06	.13	.12	14	11
Green beans, cut, 1 lb.*	.93	1.09	.11	.11	12	10
Canned and bottled--						
Peas, 303 can (17 oz.)*	.47	.61	.09	.10	19	16
Corn, 303 can (17 oz.)*	.45	.51	.08	.08	18	16
Applesauce, 25-oz. jar*	.79	.90	.14	.17	18	19
Pears, 2 1/2 can*	1.10	1.14	.18	.20	16	18
Peaches, cling, 2-1/2 can*	1.04	1.07	.16	.17	15	16
Apple juice, 64-oz. bottle*	1.31	1.36	.20	.28	15	21
Green beans, cut, 303 can*	.42	.49	.05	.06	12	12
Tomatoes, whole, 303 can*	.46	.52	.05	.05	11	10
Dried--						
Beans, 1 lb.*	.58	.70	.24	.30	41	43
Raisins, 15-oz. box*	1.26	1.30	.43	.39	34	30
Crop products:						
Sugar, 1 lb.	.34	.37	.14	.15	41	39
Flour, wheat, 5 lbs.	1.07	1.22	.33	.39	31	32
Shortening, 3 lbs.	2.56	2.79	.66	.61	26	22
Margarine, 1 lb.	.73	.82	.19	.17	26	21
Rice, long grain, 1 lb.	.48	.50	.11	.10	25	19
Prepared foods:						
Peanut butter, 1 lb.	1.79	1.81	.46	.46	26	26
Pork and beans, 303 can (16 oz.)*	.38	.41	.07	.09	18	22
Potato chips, regular, 1-lb. bag*	1.86	1.93	.24	.29	13	15
Chicken dinner, fried, frozen, 11 oz.*	1.30	1.40	.16	.18	12	13
Potatoes, french fried, frozen 1 lb.	.70	.75	.08	.10	11	13
Bread, 1 lb.	.61	.67	.05	.06	8	8
Corn flakes, 18-oz. box*	1.46	1.56	.09	.10	6	6

1/ January-June average for items noted with asterisk; annual average for other foods and for all 1988 data.

Table 9--Market basket of food products originating on U.S. farms by food group: Index of retail cost, farm value, and farm-to-retail price spread, and farm value share of retail cost 1/

Year	Meat products				Poultry				Eggs			
	Retail cost	Farm value	Farm-to-retail spread	Farm value share	Retail cost	Farm value	Farm-to-retail spread	Farm value share	Retail cost	Farm value	Farm-to-retail spread	Farm value share
	-----1982-84=100-----			Percent	----1982-84=100-----			Percent	-----1982-84=100----			Percent
1965	36	41	30	59	50	51	49	57	55	53	60	62
1966	38	44	34	58	52	53	53	53	63	65	50	66
1967	37	41	34	56	49	45	54	49	52	48	60	59
1968	38	42	33	54	51	48	54	51	56	54	61	61
1969	42	48	35	56	54	51	57	51	66	69	61	67
1970	43	47	40	53	53	46	61	46	66	64	69	63
1971	43	46	40	52	54	47	60	47	57	50	68	57
1972	48	55	42	56	54	48	60	49	56	50	68	57
1973	60	74	46	60	77	84	68	59	84	90	71	70
1974	61	67	55	54	73	76	69	56	84	89	76	68
1975	66	78	56	57	80	88	71	59	82	84	78	66
1976	66	70	63	51	77	79	75	55	91	97	81	68
1977	65	70	60	53	78	80	74	56	88	87	90	64
1978	77	85	69	54	85	93	76	58	82	83	81	65
1979	90	97	84	52	89	92	86	55	90	93	85	66
1980	93	97	89	51	94	96	92	54	89	88	89	64
1981	96	97	95	49	98	95	101	52	96	99	90	66
1982	101	104	98	52	96	91	101	51	93	91	97	63
1983	99	97	102	49	97	96	98	53	98	99	95	65
1984	100	99	100	50	107	113	101	56	109	110	107	65
1985	99	91	107	47	106	106	107	53	91	86	100	61
1986	102	94	110	47	114	115	113	54	97	92	106	61
1987	110	101	118	47	113	94	134	45	92	77	118	54
1988	112	100	125	45	121	110	133	49	94	77	124	53
1989	117	103	130	45	133	118	149	48	118	108	138	58

See footnotes at end of table.

--Continued

Table 9--Market basket of food products originating on U.S. farms by food group: Index of retail cost, farm value, and farm-to-retail price spread, and farm value share of retail cost 1/--Continued

Year	Dairy products 2/				Fats and oils 3/				Fresh fruit			
	Retail cost	Farm value	Farm-to-retail spread	Farm value share	Retail cost	Farm value	Farm-to-retail spread	Farm value share	Retail cost	Farm value	Farm-to-retail spread	Farm value share
	----1982-84=100-----			Percent	----1982-84=100-----			Percent	-----1982-84=100----			Percent
1965	36	33	40	44	35	41	34	31	29	35	27	31
1966	38	37	40	47	37	44	34	32	31	38	28	32
1967	40	38	42	47	37	38	37	28	31	37	28	31
1968	41	40	42	47	36	35	36	26	36	48	32	35
1969	42	42	43	48	36	35	36	26	34	40	32	31
1970	45	44	45	48	38	43	37	30	34	37	33	28
1971	46	44	47	47	42	49	39	32	37	42	35	30
1972	47	46	48	48	43	42	43	27	39	44	37	30
1973	51	52	50	50	47	66	40	38	44	56	40	33
1974	60	61	60	49	71	124	52	47	49	55	46	30
1975	62	63	61	50	77	97	69	34	50	58	47	30
1976	67	71	64	52	65	79	60	26	50	54	48	28
1977	69	72	68	50	71	95	62	26	58	65	55	29
1978	74	78	71	51	78	98	70	34	71	87	66	32
1979	83	88	78	52	84	106	75	34	80	89	77	29
1980	91	96	86	52	89	96	87	29	84	84	84	26
1981	97	102	93	51	99	100	98	27	88	87	89	26
1982	99	100	97	49	96	80	102	22	100	106	97	33
1983	100	100	100	48	97	96	98	27	94	80	100	27
1984	101	99	103	47	107	124	100	31	107	114	103	34
1985	103	95	110	44	109	104	111	26	118	111	122	30
1986	103	93	113	43	106	76	118	19	120	104	128	27
1987	106	93	118	42	108	74	120	18	136	114	146	26
1988	108	91	125	40	113	103	117	24	145	117	159	25
1989	116	99	131	41	121	96	131	21	155	109	176	22

See footnotes at end of table.

--Continued

Table 9--Market basket of food products originating on U.S. farms by food group: Index of retail cost, farm value, and farm-to-retail price spread, and farm value share of retail cost 1/--Continued

Year	Fresh vegetables 4/				Processed fruit and vegetables 4/				Bakery and cereal products			
	Retail cost	Farm value	Farm-to-retail spread	Farm value share	Retail cost	Farm value	Farm-to-retail spread	Farm value share	Retail cost	Farm value	Farm-to-retail spread	Farm value share
	-----1982-84=100-----			Percent	----1982-84=100-----			Percent	-----1982-84=100-----			Percent
1965	34	41	31	35	35	37	35	21	32	51	30	17
1966	33	38	31	34	36	36	36	20	33	56	31	18
1967	33	38	31	32	36	33	37	18	34	54	32	17
1968	35	40	33	33	38	38	38	20	35	52	33	16
1969	36	42	35	33	39	39	38	21	36	52	34	16
1970	39	43	38	32	39	37	40	19	38	56	36	16
1971	40	46	38	33	41	38	42	18	40	57	38	16
1972	43	47	41	32	42	40	42	19	40	60	37	17
1973	53	64	48	35	44	43	44	19	44	90	38	22
1974	58	67	54	34	54	60	53	22	57	130	48	25
1975	55	67	51	35	61	66	60	21	63	106	57	18
1976	58	67	55	33	62	63	62	20	62	86	59	15
1977	65	74	62	33	65	59	66	18	63	72	61	12
1978	70	75	69	30	71	88	67	25	68	83	66	13
1979	73	71	73	28	77	91	74	24	75	95	73	14
1980	79	73	81	27	83	97	79	23	84	111	81	14
1981	94	104	90	32	92	106	89	23	92	110	90	13
1982	94	95	94	34	97	100	97	24	97	96	97	12
1983	98	97	98	34	98	93	100	23	100	101	99	12
1984	108	108	108	34	104	107	103	24	104	103	104	12
1985	104	93	109	31	107	118	104	26	108	94	110	11
1986	108	90	117	28	105	102	106	23	111	76	116	8
1987	122	110	128	31	109	111	108	24	115	71	121	8
1988	129	106	141	28	118	137	112	28	122	93	126	9
1989	143	124	153	29	125	135	122	26	132	102	136	9

1/ See table 6 for aggregate market basket and explanation of data. 2/ Includes butter. 3/ Excludes butter and includes peanut butter. 4/ Includes potatoes.

to provide greater service and more prepared foods. Development of new products, such as microwaveable foods, has increased use of packaging materials. Increased spending on advertising and promotion of branded foods has also added to costs.

The market basket farm-to-retail price spread attempts to measure charges for performing services connected with a fixed quantity of foods of a constant type and quality. However, the types of services incorporated into food sold in grocery stores have changed over time as a result of new product introductions and greater food preparation, such as fruit and vegetables sold at salad bars. These new and usually higher value foods are incorporated into the market basket retail price measurement calculations over time, resulting in a change in the type and quality of foods in the market basket. These changes in foods marketed with added services may increase price spreads.

Price spreads increased for most food groups in the market basket, reflecting higher costs, variations in farm prices, and the normal lag in retail price adjustment (table 7). The farm-to-retail spread for red meat increased about 4 percent, due mainly to increases for pork. The price spread for Choice beef increased about 7 percent, which may partly reflect value added from greater trimming of fat and boning of beef. A year earlier, the price spread for beef rose only 2 percent, although retail beef prices rose sharply because of increased farm value. In contrast, the 1989 farm-to-retail price spread for pork increased about 10 percent, following a slight decline the previous year. The fluctuations in the marketing spread for beef and pork partly reflect retail merchandising practices designed to maximize total meat department sales and profits. Added profits from one meat may offset lower profits from another for a period, but may reverse over time due to changes in beef and pork sales, which, along with the margin, determine meat department revenues. Retailers also may minimize price changes for consumers by not fully adjusting margins with each change in commodity and marketing costs.

The 1989 price spread for cereal and bakery products widened 8 percent, which was a third greater than the yearly increase since 1980. The 1989 increase partly reflected rising packaging costs. Industry advertising, promotion, and selling expenses likely rose to capitalize on growing demand for products that consumers perceive to be nutritionally beneficial. In 1988, a 30-percent increase in farm values of food grains and other farm ingredients limited the increase in the farm-to-retail price spread to its smallest in several years. However, over the 2-year period, the spread rose 13 percent and accounted for 80 percent of the rise in retail prices.

The price spread for poultry, which declined slightly in 1988, increased 12-percent in 1989. The price spread for eggs rose 11 percent last year as egg prices rose sharply at all market levels.

The price spread for dairy products rose about 5 percent, slightly less than the rise in retail dairy prices. The marketing spread for dairy products has risen about the same as most foods, even though the fluid milk processing industry experienced a large 4.5-percent annual increase in labor productivity during the 1980's.

The farm-to-retail price spread increased about 11 percent for fresh fruit. Retail prices increased, but grower fruit prices declined. The price spread for fresh vegetables went up less than for fruit, reflecting a sharp rise in farm value. Higher retail prices and marketing spreads reflect strong

consumer demand. Per capita consumption of fresh fruit and vegetables has increased at an average annual rate of more than 2 percent since 1980.

A Look Back at the 1980's

Retail prices of the market basket of food bought in grocery stores rose 42 percent during 1980-89. In contrast, the farm value was only 11 percent higher last year than in 1980 (fig. 2). But the farm-to-retail price spread rose 60 percent, which slightly exceeded the rise in the general inflation rate measured by the CPI-U for all items less food.

The farm-to-retail price spread for the market basket of foods has increased each year since 1980. Increases in the farm-to-retail spread usually were close to the general inflation rate, reflecting the link (in terms of products and services used) between the food industry and the economy. Input costs of the food industry have gone up with the rise in the general price level, resulting in higher food processing and distributing charges.

Farm value of food varied during the 1980's, rising some years and then declining. Very large crop production and expanded meat supplies limited the rise in farm value to 3 percent in 1981. As a result, retail food prices went up much less than did inflation. Crop harvests were again large in 1982.

Although meat production declined slightly, the farm value slightly declined because the recession weakened domestic and foreign demand for agricultural

Figure 2

Price components of the market basket

Price spread in 1989 continued its upward trend.

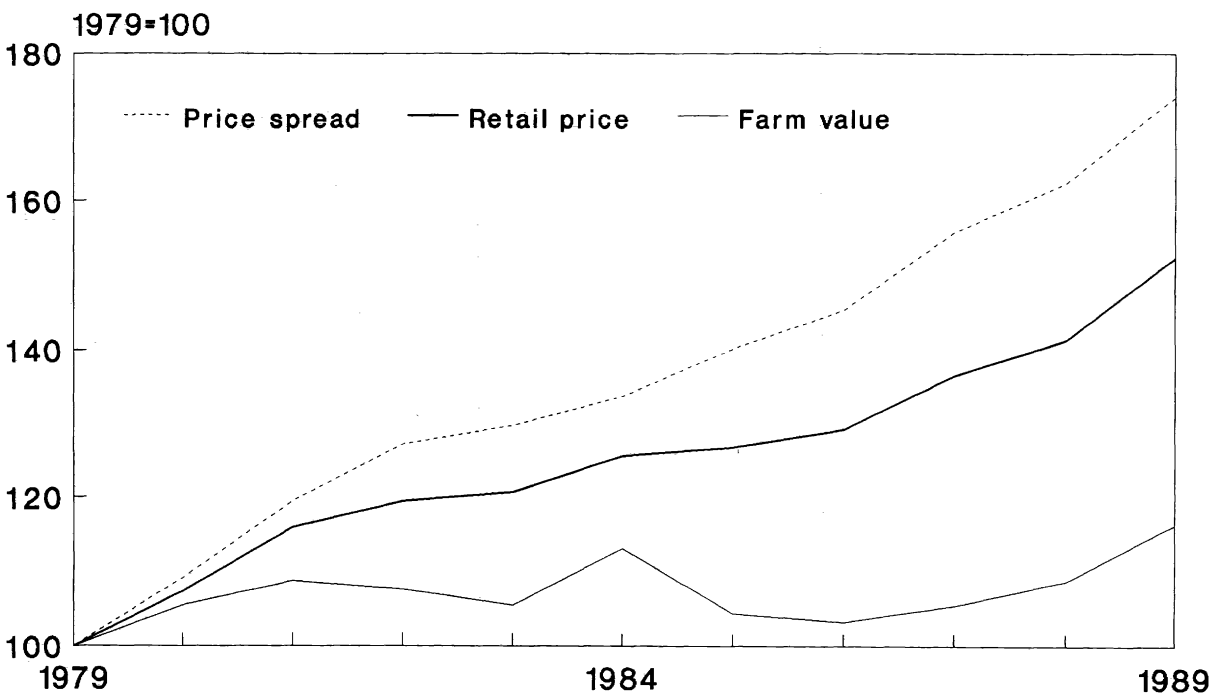

Retail prices based on the CPI for food eaten at home. Farm value based on prices received by farmers. Price spread represents processing and distributing charges.

commodities. The farm value declined in 1983 because of increased livestock production, particularly of hogs, and continued large supplies and weak demand for most food commodities. Farm value rose about 6 percent in 1984 mainly because of smaller supplies of oilseeds and fruit caused by drought damage to the soybean crop the previous year and a winter freeze of the citrus crop. However, a decline in farm value in 1985 and 1986, reflecting larger livestock and crop production, more than offset the rise in farm value in 1984. Farm value increased the last 3 years of the 1980's, due in large measure to higher cattle and poultry prices and the 1988 drought, which greatly reduced production of food grains and some vegetable crops. The 6.7-percent rise in farm value in 1989 was the largest of the decade.

During the 1970's, farm value and the farm-to-retail price spread moved at similar rates. Between 1970 and 1980, all three market basket series--farm value, farm-to-retail spread, and retail price--more than doubled and greatly exceeded the rise in the 1980's.

The contrasting trend in the market basket series between the 1970's and the 1980's largely reflects the much different behavior of farm value. Amid strong world demand for grains and oilseeds and reduced supplies of meat, farm value rose 46 percent during 1972-74. Wheat and soybean prices rose sharply following huge sales to Russia. Livestock price increases reflected higher feed costs and Government actions to limit retail meat price increases that disrupted livestock marketings and production. During 1978-80, a smaller but significant 17-percent increase occurred in farm value, largely because of lower beef production and strong world grain markets.

Food Industry Costs, Profits, and Productivity

Many factors influence how much the food industry charges for its services. Food industry input costs, profits, and productivity largely determine how much the price of food increases after it leaves the farm.

Prices of Marketing Inputs

Increases in farm-to-retail price spreads mainly reflect rising costs that food industry firms face. These costs include wages and salaries of workers and prices of many supplies and services bought by marketing firms from other parts of the economy. ERS maintains a food marketing cost index (FMCI) for monitoring and analyzing changes in operating costs incurred in processing, wholesaling, and retailing foods. The FMCI consists of hourly earnings of workers and price indexes of various marketing inputs, weighted by the share of each input in total operating costs. The FMCI is not a substitute for more conventional measures of marketing costs. However, the behavior of the index at least partially indicates changes in operating costs of the food marketing sector. The index does not account for changes in productivity and profits.

The largest component of the index (45 percent) is labor costs. Food containers and packaging materials (15 percent), transportation rates (11 percent), and energy costs (8 percent) complete the list of leading cost components of the index. Other cost components include advertising, maintenance and repair services, insurance, short-term interest, rent, and miscellaneous supplies and services.

In 1989, the FMCI rose 3.5 percent, the largest increase since 1984. Prices rose for most inputs required in food processing and distribution. Increases were largest for energy to operate stores and plants, advertising rates, taxes and insurance, various supplies and services, and interest rates on short-term credit (table 10). Because we assume that businesses must recover increases in variable costs, the rise in the FMCI partially explains the observed increase in the farm-to-retail price spread and food prices at retail. The smaller rise in the FMCI than in the farm-to-retail spread in 1989 indicates that other factors are affecting marketing charges. These factors could include changes in the mix of variable inputs, rising fixed costs, higher profits that are excluded from the FMCI, productivity changes, and consumer demand.

Labor Compensation

Low unemployment rates and slightly higher inflation have given an upward push to labor compensation in the past 2 years. The labor cost index, the largest component of the FMCI, rose about 3 percent in 1989. The index is computed from changes in worker's hourly earnings and a factor for wage supplements. The rise in the labor cost index was small, particularly in food retailing, because the index does not reflect lump-sum payments that many workers have received in lieu of wage increases. Lump-sum payments are attractive to both labor and management because workers get a pay raise, but the basic wage rates remain the same. The latter is important to retailers because some compensation, such as overtime and vacation pay, is based on the basic wage rates. Greater use of part-time workers, who usually earn less than full-time workers, may also have contributed to the small rise in hourly earnings in food retailing.

Hourly earnings of workers increased about 2.4 percent in food manufacturing and 1.9 percent in foodstores in 1989. The rise for foodstore employees was the largest since 1984. Hourly earnings in food manufacturing averaged $9.33 per hour in 1989 and $7.14 per hour in food retailing (table 11).

Wage supplements, the other component of the labor index, increased because of rising health insurance premiums, pensions, and Social Security taxes paid by employers. Social Security payroll taxes for employers went up because of an increase in the maximum amount of taxable wages from $45,000 to $48,000. However, the tax rate on wages remained unchanged at 7.51 percent. Health insurance benefit costs increased because of the rising cost of medical care. In 1989, the CPI for medical services increased 7.7 percent.

Another measure of the change in the cost of labor is the Employment Cost Index (ECI), a quarterly series published by the Bureau of Labor Statistics. It has several advantages in measuring labor cost changes over the average hourly earnings that are the basis of the FMCI. The ECI includes the employer's cost of employee benefits and lump-sum payments, a growing compensation practice in recent years. Changes in wages and salaries are based on wage rates (rather than on average earnings) that eliminate the effect of shifts in the occupational mix of employment. Changes in the proportion of full-time and part-time workers in food retailing probably have caused average earnings both to increase at a slower rate than the ECI series and to understate the change in the price of labor.

The ECI for foodstores rose 3.5 percent for the year December 1988 to December of 1989 (table 12). This rise in worker compensation costs was larger than the 1988 gain (2.8 percent). The compensation cost increase in 1989 reflected

Table 10--Price indexes of food marketing costs 1/

Year	Labor, hourly earnings and benefits				Packaging and containers							Transportation services
	Total	Processing	Wholesaling	Retailing	Total	Paper boxes and containers	Metal cans	Paper bags and sacks	Plastic packaging	Glass containers	Metal foil	
						1967=100						
1967	100.0	100.0	100.0	100.0	100.0	100.0	100.0	100.0	100.0	100.0	100.0	100.0
1968	106.5	105.9	106.7	107.0	96.3	95.9	104.4	101.0	78.4	107.5	100.2	102.0
1969	113.7	112.7	113.5	114.8	99.5	99.4	107.1	103.6	79.9	114.7	105.5	105.0
1970	122.5	121.2	125.1	122.6	103.6	101.1	113.1	108.0	86.0	120.3	106.3	114.3
1971	131.9	130.9	131.9	133.0	106.6	102.4	123.8	109.7	81.8	131.6	106.4	128.5
1972	143.3	134.0	143.7	146.4	110.4	105.5	131.8	113.6	82.9	135.1	106.1	132.5
1973	154.2	151.3	153.7	157.3	117.3	115.1	138.5	121.6	86.4	138.9	106.0	135.2
1974	168.7	164.3	167.4	173.7	149.7	152.2	170.3	144.9	129.6	155.5	113.0	156.3
1975	187.4	184.1	182.3	192.9	174.4	170.3	200.2	161.6	170.8	181.8	116.6	176.9
1976	203.8	200.1	197.6	210.3	184.8	176.2	212.1	170.0	188.1	195.4	127.1	194.4
1977	222.4	217.6	217.8	229.4	192.8	176.5	231.4	176.7	193.6	214.4	140.0	205.1
1978	244.4	237.7	239.3	254.0	204.7	179.6	263.8	186.5	192.1	244.4	159.3	220.5
1979	265.8	257.9	260.4	276.1	228.4	202.1	293.0	209.7	216.9	261.1	175.6	251.3
1980	292.6	283.3	283.5	306.4	261.5	234.6	325.7	236.5	238.5	292.7	184.1	296.8
1981	321.3	309.2	309.5	338.6	280.9	258.2	345.8	258.9	262.5	328.6	203.3	345.9
1982	342.7	330.0	335.1	359.3	275.1	254.9	363.6	264.4	200.0	355.7	213.2	371.1
1983	356.8	341.9	358.1	371.1	280.7	251.0	374.3	265.4	226.2	352.4	214.0	374.5
1984	365.5	350.2	371.1	378.3	303.5	264.0	397.3	290.9	273.1	360.8	226.9	391.7
1985	363.0	357.9	373.5	363.5	312.1	271.6	416.9	294.7	274.4	380.0	213.8	393.9
1986	359.4	363.4	376.3	347.9	317.4	269.1	430.1	307.9	274.8	398.0	209.3	391.7
1987	361.2	370.2	384.2	341.7	329.8	288.0	433.0	331.3	280.2	402.0	222.1	385.0
1988	368.9	380.5	393.9	349.5	350.7	308.1	442.3	372.2	305.7	398.9	266.9	403.5
1989	379.4	391.1	409.2	354.5	364.6	323.7	443.2	409.2	313.2	409.9	274.4	404.9

See footnote at end of table.

--Continued

Table 10--Price indexes of food marketing costs 1/--Continued

Year	Advertising	Fuel and power: Total	Fuel and power: Electric	Fuel and power: Petroleum	Fuel and power: Natural gas	Communications, water, and sewage	Rent	Maintenance and repair	Business services	Supplies	Property taxes and insurance	Interest, short-term	Total marketing cost index
						1967=100							
1967	100.0	100.0	100.0	100.0	100.0	100.0	100.0	100.0	100.0	100.0	100.0	100.0	100.0
1968	102.5	99.7	100.9	101.9	92.7	100.8	104.4	105.8	105.0	102.1	109.2	115.5	103.5
1969	107.5	100.5	101.8	102.4	93.2	102.8	109.4	113.7	109.9	102.8	118.3	153.2	109.2
1970	109.6	106.1	105.8	106.5	103.6	105.1	115.4	122.3	115.6	106.5	130.4	150.9	116.1
1971	108.7	112.3	113.6	110.3	108.0	111.3	121.7	131.5	123.5	108.7	141.9	100.0	123.0
1972	113.2	118.4	121.5	113.3	114.1	117.8	126.3	137.9	128.2	119.9	153.3	92.6	130.5
1973	118.2	133.1	129.3	139.7	126.7	120.8	131.1	146.7	133.3	113.4	158.4	159.5	139.4
1974	124.2	198.9	163.1	272.2	162.2	126.3	145.9	164.3	146.8	145.1	162.9	192.6	159.8
1975	136.9	236.1	193.4	309.4	216.7	131.8	167.0	182.2	159.6	169.9	180.1	123.7	178.8
1976	152.8	264.5	207.7	336.9	286.8	138.4	174.9	196.1	171.3	181.3	194.5	104.7	193.6
1977	166.3	310.6	232.9	384.1	388.0	142.6	185.0	209.2	182.5	188.9	219.0	109.8	209.2
1978	181.3	331.7	250.6	398.1	428.7	147.5	199.2	226.9	195.2	197.8	237.3	156.4	227.0
1979	197.4	418.2	270.3	574.6	544.8	148.7	216.4	249.7	211.0	224.3	246.9	213.5	252.2
1980	214.5	563.2	321.6	850.6	724.8	153.9	235.0	277.1	230.6	259.3	270.2	240.3	286.0
1981	234.9	669.2	367.9	1,056.2	826.3	168.7	255.0	304.0	254.2	283.8	294.0	288.8	317.5
1982	260.1	705.1	406.1	1,012.1	990.3	186.7	264.3	325.1	277.1	289.1	309.9	232.6	334.0
1983	280.2	705.1	417.9	895.9	1,155.6	199.6	260.6	338.2	291.9	286.5	327.5	174.0	343.0
1984	300.5	712.5	440.0	880.4	1,162.6	215.5	261.3	350.3	306.1	288.3	343.7	198.4	356.2
1985	320.2	700.0	453.5	821.5	1,158.2	224.9	262.9	360.3	321.9	287.9	362.0	157.2	358.6
1986	339.7	590.2	457.9	499.8	1,096.9	236.1	267.0	368.5	334.1	282.7	382.3	125.1	354.9
1987	361.1	596.7	450.5	561.4	1,049.0	238.4	262.3	382.6	346.1	286.8	399.6	132.9	360.4
1988	384.7	578.2	453.3	502.0	1,042.1	241.3	265.3	395.9	371.4	305.6	419.9	150.3	371.8
1989	410.4	619.4	468.9	592.1	1,070.9	247.3	269.8	410.7	388.3	321.4	439.7	172.1	384.8

1/ Indexes measure changes in employee wages and benefits and in prices of supplies and services used in processing, wholesaling, and retailing U.S. farm food purchased for consumption at home.

Table 11--Average hourly earnings of production and nonsupervisory employees of food industries

Year	Manufacturing, food and kindred products	Wholesale trade, groceries and related products	Foodstores	Eating and drinking places
		Dollars per hour		
1977	5.37	5.43	4.77	2.93
1978	5.80	5.92	5.23	3.22
1979	6.27	6.39	5.67	3.45
1980	6.85	6.96	6.24	3.69
1981	7.44	7.57	6.85	3.95
1982	7.92	8.25	7.22	4.09
1983	8.19	8.70	7.51	4.27
1984	8.39	9.03	7.64	4.26
1985	8.57	9.22	7.35	4.33
1986	8.75	9.30	7.06	4.35
1987	8.94	9.52	6.95	4.42
1988	9.11	9.75	7.01	4.57
1989	9.33	10.12	7.14	4.75

Source: Employment & Earnings, U.S. Department of Labor.

Table 12--Changes in the Employment Cost Index for workers in food retailing

Period	Employment Cost Index for--			
	Total compensation costs	Wages and salaries	Total compensation costs	Wages and salaries
	Percentage change for 3-months ended		Percentage change for 12-months ended	
1987:				
December	1.1	0.9	--	--
1988:				
March	.8	.6	--	--
June	.6	.5	--	--
September	.2	.4	2.7	2.8
December	1.2	.8	2.8	2.3
1989:				
March	1.6	1.1	3.6	2.8
June	.2	0	3.3	2.3
September	.8	.4	3.8	2.3
December	.9	1.3	3.5	2.8

-- = Not available
Source: U.S. Department of Labor, Bureau of Labor Statistics.

a wage and salary gain of 2.8 percent, up from 2.3 percent for the 12 months ended in December of 1988. Compensation costs rose more than wages and salaries in 1989 because benefit cost increases were much greater than gains in wage rates. Though not reported separately, the increase in benefit costs likely was about 5.5 percent in 1989, or double the rise in the wage rate of foodstore workers.

Most major collective bargaining agreements in the food industry in 1989 provided wage-rate increases. Since the agreements are usually for a period of years, terms of the settlements are an important indicator of future changes in labor costs. In 1989, about 30 major foodstore labor contracts were settled, involving about 178,000 workers. According to data compiled by the United Food and Commercial Workers Union, a 3-year, 12.3-percent wage increase was the average wage settlement achieved in 12 of the contacts. However, a sampling of negotiated contracts reveal a broad range in wage increases and other terms among groups of workers in the various regions of the country.

For instance, 13,000 employees of foodstore chains in Minnesota settled on a 3-year contract that provided a 40-cent-per-hour immediate wage increase for full-time, top-rated grocery clerks and meatcutters, followed by 35-cent increases in the second and third years. Their respective wage rates prior to the settlement were $13.58 and $14.69 per hour. The accord also provided increases in employer financing of the health insurance plan, but benefits are now subject to reduction if financing increases are insufficient to maintain benefit levels. Health care costs are the single most difficult issue between workers and employers and are most often the cause of disputes between the two parties.

In the largest settlement, 38,000 grocery-store workers in northern California agreed to a 3-year contract that will give them lump-sum payments instead of increases in base rates of pay. An initial payment was equal to 25 cents per hour, to be followed by payments every 6 months equal to 42 cents for every straight-time hour worked. Employers also increased their payment to the pension fund for workers.

In the Philadelphia, Pennsylvania, area, 8,000 clerks and the employer agreed to a contract containing numerous provisions that were of mutual interest. A single job-classification system and wage-progression scheme were adopted, and the rate of pay for new hires was increased to $5 per hour, progressing to $12 per hour after 5 years. Current employees earning less than $12 per hour get a 60-cent-per-hour wage increase in each of the next 3 years. Pension benefits were raised and modifications were made in coverage and eligibility of employees in the health and welfare plan. The contract also provides a package of provisions for part-time workers, whose benefits the union has been working to improve because of the growing numbers of such workers. Part-time workers became eligible for basic health benefits after 60 days service, and the minimum hours of work were raised from 12 to 20 per week, with maximum hours of from 29 to 35 per week. The company also will increase full-time positions 10 percent, and will establish tuition and education benefits and childcare assistance.

Twenty-seven thousand employees of the two major food chains in the Washington, DC, area recently negotiated a relatively large pay increase. The 3-year agreement provided an immediate $1.00-per-hour wage increase for all employees. Employees hired prior to the adoption of a two-tier pay schedule in 1983 will receive a 45-cent-per-hour increase and a $200 to $500

lump-sum payment in 1990 and 1991. Other employees will receive larger wage increases--50 cents per hour--that will narrow the wage differential between the tiers to 90 cents. Some narrowing has occurred in the previous settlement. The companies will also continue to pay the full cost of health insurance premiums, which they had initially pressed for employees to assume part of the cost. The companies conceded on this and some other issues to ease their employee hiring and retention problems in a tight labor market.

Overall, labor settlements in food retailing last year provided pay raises for most workers and increases in benefits that likely will boost labor costs. However, through an assortment of changes in labor use and compensation, the retail food industry has lowered average hourly earnings, as measured by the U.S. Department of Labor, by about 7 percent since 1984. This was accomplished through lower wages for new workers, reduced overtime pay, changed work rules to allow lower paid workers to do additional jobs in stores, and employment of more part-time workers.

Labor contracts that increased wages and benefits of workers were also negotiated in the food processing industry in 1989. Employees of an orange juice processor in Florida received a pay increase of 4.5 percent, with 3-percent increases to follow in 1990 and 1991. Some workers also received a lump-sum payment in 1989 equal to 2 percent of their earnings during the preceding 12 months. Workers also will progress to the top pay rate in a shorter period of time, and starting pay of new workers was increased to 75 percent of the standard salary. The company also increased its payment for medical benefits, and reduced the waiting period for dental benefits. To raise productivity, an incentive program will begin in 1991 that will earn workers a maximum payment of 2 percent of salary.

In the meatpacking industry, where there has been intense worker-management disagreement over employee compensation, 2,700 hog slaughtering and processing workers in Iowa and Minnesota accepted a 40-month contract, which they had earlier rejected, that provides three hourly wage increases of 10, 12, and 18 cents, bringing base pay to $9.10 in January 1992. The workers will also receive a lump-sum payment in 1990 equal to 10 cents per hour worked in 1989. The company contended that larger raises were not possible because of intense competition from lower cost nonunion firms. Intense competition from the nonunion firms also was cited by a firm in South Dakota as the reason wages and benefits were cut after the employees rejected a proposed contract that called for a $1.75-per-hour reduction in the $9.75-per-hour wage rate. Despite the cut, the employees did not strike because they felt a strike could negate awards for backpay or could weaken filings of unfair labor practice charges against the company.

In the meat-processing industry, where compensation for employees tends to be higher because profits are higher on such operations than on slaughtering, 1,400 employees of a Wisconsin plant received a single 25-cent per hour wage increase in a 3-year contact. This raised the basic pay to $10.95 per hour. However, the contract also established a bonus plan that could result in annual distributions of up to $1,500 beginning in 1991. Payments will depend on the degree of success in attaining productivity, safety, and cost-saving goals to be set by the union and the company.

Packaging, Supplies, and Services

Prices increased in 1989 for all principal categories of inputs bought by the food industry. Fuel and power rates, which declined slightly in 1988, averaged 7 percent higher, led by an 18-percent rise in natural gas prices.

The index of prices paid for food containers and packaging materials rose about 4 percent in 1989. Prices for paper bags and sacks rose 10 percent and prices for shipping boxes rose 5 percent, contributing most to the rise in the packaging index. Following a sharp climb in 1988, plastic packaging went up only 2.5 percent in 1989. Prices of metal cans were stable in 1989, but glass container prices rose 2.8 percent.

A price index of supplies used by food processors and retailers averaged about 5 percent higher in 1989. This index is based on producer prices of motor vehicle supplies, chemicals, cleaning materials, and numerous other items. Prices for most services also continued to increase last year. Advertising rates advanced nearly 7 percent, and business services, such as accounting and printing, went up 4.5 percent. Property taxes and insurance, a rapidly rising cost in recent years, advanced about 5 percent in 1989.

Higher interest rates also pushed marketing costs up. Short-term rates, measured by 4- to 6-month commercial interest rates, averaged 14 percent higher in 1989 than in 1988.

Transportation Rates

The transportation cost index, representing railroad freight rates, stabilized in 1989 following a 4.8-percent rise in 1988, the largest since 1984. Most foods shipped by railroad are canned and bottled products. Some meat and fresh fruit and vegetables are shipped in truck trailers on flat cars (TOFC), but information on these charges is not available. TOFC shipments of fresh fruit and vegetables declined about 6 percent during 1989, remaining at about 5 percent of total produce shipments. A slightly larger quantity of produce is shipped in rail cars.

Nearly 90 percent of fresh produce is transported by truck. Individuals who own and operate trucks appear to carry slightly less than 50 percent of the west-to-east shipments of produce and shipments from Florida. Most produce is hauled by trucking firms operating fleets, and by companies whose principal business is not transportation. Some owner-operators lease their equipment and their services as drivers to these companies. All groups of truckers have become important fresh and processed food distributors, and competition among them for hauling produce has held down truck rates.

Operating costs of trucks hauling produce, as reported by USDA's Office of Transportation, rose 5 cents per truck mile in 1989. Truckers experienced the largest cost increases in fuel (10 percent) and wages (3 percent). In 1989, fuel costs averaged 1.4 cents higher per truck mile than in 1988. Costs of labor averaged 1 cent higher. Most other costs, such as insurance and maintenance, were fractionally higher.

Although costs were higher, truck rates for shipping fresh produce crept up moderately. For example, the rate for shipping lettuce from California to New York City averaged $3.76 per box in 1989, 1.9 percent higher than in 1988. Truck rates averaged $3.20 per box for citrus fruit and vegetables in 1989, also 1.9 percent higher than in 1988 (table 13). However, the rate for apples

was nearly stable. As large numbers of refrigerated semitrailers are added to the fleet, slightly less than 20,000 in 1989, competition among truckers has intensified, moderating rate increases.

Financial Ratios

Two financial ratios are useful in evaluating the profitability of the food industry: profit margin and return on stockholder equity. The profit margin is net income as a percentage of sales. It measures the portion of the sales dollar left after paying all expenses, including the cost of food products. The profit margin helps explain the importance of profits compared with costs that, together, make up the consumer food dollar. Return on stockholder equity, which reflects the earning power of the owner's investment, shows food industry profitability compared with that of other industries.

The after-tax profit margin of food and tobacco manufacturers averaged 4.1 percent of sales in 1989, down from a 5.5-percent peak level in 1988, based on

Table 13--Trucking costs and rates for fresh fruit and vegetables, selected items and routes, annual average

Year	Truck cost for fleet operators 2/	Truck rates by commodity and origin/destination 1/		
		Lettuce 3/, California to New York City	Citrus and vegetables, southern California to New York City	Apples, Washington State to New York City
	Dollars per mile	Dollars per box		
1980	0.96	3.36	2.77	3.09
1981	1.08	3.45	2.77	3.25
1982	1.11	3.62	2.91	3.20
1983	1.13	3.62	2.98	3.41
1984	1.15	3.65	3.18	3.19
1985	1.17	3.62	3.06	3.20
1986	1.14	3.75	3.16	3.21
1987	1.16	3.83	3.23	3.28
1988	1.18	3.69	3.14	3.30
1989	1.23	3.76	3.20	3.31
		Percent		
Change, 1980-89	28.1	11.9	15.5	7.1

1/ Truck rates are the average rates reported by Agricultural Marketing Service, Market News Service, USDA, for the first week of the month. Rates per truck were converted for 1980 to 1983 at: Lettuce, 800 boxes/load; citrus fruit and vegetables, 1,000 boxes/load; apples, 900 boxes/load. Beginning in 1984, rates were converted at 850 boxes/load of lettuce from Salinas, CA, and 860 boxes/load for lettuce from Imperial Valley, CA, and 1,000 boxes/load for apples. 2/ Truck costs developed by Office of Transportation, USDA. 3/ January to April: Imperial Valley, CA, to New York City; May to December: Salinas, CA, to New York City.

data compiled by the U.S. Bureau of the Census. Returns on stockholders' equity declined to 16.9 percent last year (table 14). However, returns on equity for the food and tobacco industry were slightly higher than the 16.5-percent average for all manufacturers of nondurable products. The margin squeeze for food manufacturers last year is attributed, in part, to a slowing of the economy and larger costs, particularly interest expense, by companies involved in takeover and buyout activity. For one large food processor, operating earnings were reduced $343 million as a result of plant consolidations, workforce reductions, and goodwill writeoffs.

While the industry average declined, profit margins of many food processors improved last year as a result of aggressive marketing, new product lines, and greater concentration of market share in many packaged food categories. Among 29 companies selling branded food products listed in Forbes magazine's annual industry survey, 14 companies improved their net profit margin in 1989. One company earned the same margin, and 14 earned a smaller margin.

Profit margins of retail food chains averaged 0.8 percent of sales in 1989, down from 0.9 percent a year earlier. The industry average was held down by a substantial decline in the margin of one company. After-tax profit margins for most leading food chains slightly improved in 1989 (table 15). Kroger, the largest food chain, reported an extraordinary drop in profit margin from 1.2 percent of sales in 1988 to a loss of -0.2 percent in 1989. This drop partly reflected the writeoff of financing costs associated with recapitalizing the company when threatened with a leveraged buyout.

Labor Productivity

Food industry productivity estimates for 1989 were not available at press time. But, productivity improved only 0.9 percent during 1989 in the Nation's total business sector, excluding farming. This has been the smallest gain since 1982. Employment in the food industry rose and likely offset small increases in output. Output of grocery stores rose only about 0.6 percent, as measured by food sales adjusted for inflation. Real sales in eating and drinking places were flat, likely precluding any rise in productivity. Productivity in food retailing and eating places has trended down during the past decade.

There has been substantial improvement of labor productivity in industries that manufacture food. Output per unit of labor in seven food manufacturing industries for which data are available increased 1-5 percent per year over the 1977-87 period (table 16). These increases, in most instances, resulted from increased output and a small decline in hours worked. Labor productivity among food manufacturers has increased most in fluid milk processing and grain milling. Productivity has grown erratically for most industries, partly because of fluctuating output and business conditions.

Output per unit of labor among supermarkets has drifted lower since the late 1970's, falling 1 percent in 1988 from 1987 to about 8 percent lower than in 1980. However, some store operations are more efficient because of computer-assisted checkout and data processing systems, and new store formats, such as warehouse stores with a limited assortment of products. Warehouse stores provide reduced services and thus cut labor requirements, or they foster higher sales per unit of labor.

Most food chains have closed smaller, inefficient stores. On the other hand, supermarkets have expanded service-oriented operations, such as delicatessens,

Table 14--Profit margins of food manufacturers and retail food chains, industry averages

Year and quarter	Food manufacturers 1/			Retail food chains 2/		
	After-tax profits as a percentage of--					
	Sales	Stockholder equity	Assets	Sales	Stockholder equity	Assets
	Percent					
1977	3.1	13.2	6.7	0.8	10.7	4.5
1978	3.3	13.8	6.8	.9	12.7	4.7
1979	3.3	14.7	7.2	.9	12.7	4.2
1980	3.4	14.7	7.1	.9	13.7	4.5
1981	3.1	13.6	6.5	1.0	13.9	4.7
1982	3.1	13.0	6.3	.9	12.7	4.4
1983	3.3	13.3	6.0	1.1	13.6	4.9
1984	3.3	13.3	6.0	1.4	17.3	6.0
1985	4.1	15.3	6.6	1.3	14.5	5.3
1986	4.2	16.2	6.3	1.1	11.9	4.4
1987	4.6	17.5	6.8	.9	12.8	3.6
1988	5.5	20.9	8.1	.9	13.6	3.2
1989	4.1	16.9	5.4	.8	20.7	2.9
1985:						
I	3.4	12.8	5.6	1.1	13.0	4.7
II	3.9	15.0	6.6	1.3	14.9	5.5
III	4.6	16.5	7.3	1.2	13.2	4.8
IV	4.6	16.9	7.1	1.5	16.8	6.3
1986:						
I	3.6	13.3	5.4	1.2	13.0	4.8
II	4.0	15.9	6.4	1.3	13.8	5.3
III	3.9	15.5	5.9	.7	7.1	2.6
IV	5.2	20.0	7.6	1.2	13.6	5.0
1987:						
I	3.7	13.6	5.1	.7	9.0	2.6
II	4.5	17.4	6.7	1.0	13.2	3.9
III	4.4	17.0	6.7	.7	9.7	2.6
IV	5.7	21.6	8.5	1.4	19.0	5.1
1988:						
I	5.2	19.1	7.5	.7	8.6	2.5
II	6.5	25.0	9.9	1.5	20.7	5.2
III	5.6	21.9	8.6	.8	11.5	2.9
IV	4.7	17.9	6.7	.6	14.3	2.0
1989:						
I	4.1	15.5	5.2	.8	19.1	2.6
II	3.9	16.4	5.3	.9	23.4	3.3
III	3.2	13.4	4.2	.8	18.9	2.7
IV	5.3	22.1	7.0	.9	21.5	3.1

1/ Data represent aggregate estimates for corporations, based on a sample of company reports. Beginning in 1985, data are not comparable with earlier years because the tobacco industry was combined with food manufacturers. 2/ Data are based on reports from all food retailing corporations having more than $100 million in annual sales, at least 70 percent of which are derived from supermarket operations.

Source: U.S. Department of Commerce.

Table 15--After-tax profits of selected supermarket food chains per dollar of sales, fiscal year or four calendar quarters

Firm	1984	1985	1986	1987	1988	1989
			Percentage of sales			
Albertson's	1.68	1.68	1.86	2.14	2.40	2.65
American Stores	1.53	1.11	1.03	1.08	.53	.54
Atlantic & Pacific Tea	.86	.85	.88	1.09	1.27	1.32
Food Lion	2.54	2.55	2.57	2.90	2.95	2.96
Giant Food	2.11	2.54	1.84	2.78	3.28	3.34
Kroger	1.01	1.00	.81	1.04	1.20	.18
Fred Meyer, Inc.	--	--	1.23	1.73	1.77	--
Marsh Supermarkets, Inc.	.70	.90	.87	.92	.95	--
Publix Supermarkets	2.35	2.07	2.22	2.08	2.11	--
Safeway	.94	1.00	-.07	-.43	-.12	.02
Stop & Shop	1.62	1.03	1.15	1.28	--	--
Winn-Dixie	1.47	1.34	1.26	1.30	1.41	1.67
Hannaford Bros. Co.	1.60	1.78	2.09	2.33	2.29	2.46

-- = Not available.
Source: Food Institute Reports, The American Institute of Food Distribution Inc., Fair Lawn, New Jersey.

salad bars, and instore bakeries, in response to consumer demand for saving time in food buying and preparation. Providing the products and shopping convenience that consumers want has added to industry employment and has made productivity gains more difficult. In addition to tailoring products to consumer demand, many supermarkets are trying to make shopping easier and faster by opening more registers at busy times and by extending store hours.

Labor use in food retailing increased 21 percent between 1980 and 1988, based on the latest available U.S. Department of Labor data, and output rose 12 percent, resulting in lowered productivity. The effect of more labor use on unit costs has been partly offset, however, by a decline in average hourly earnings since 1984.

The trend in productivity is similar for eating places. Although labor productivity in eating and drinking places rose in 1988 for the third consecutive year, it was 9 percent lower than in 1980. Productivity declined since 1980 because hours worked rose 30 percent, but output rose only 19 percent.

Food Spending: How It Was Distributed

Food spending for domestically produced food in 1989 represents the retail market value of food purchased by or for civilian consumers. Spending is affected by both the quantities of food bought and the prices paid. The expenditures reported in this section include spending at grocery stores,

Table 16--Indexes of output per employee hour in selected food manufacturing industries, retail food stores, and eating and drinking places

Year	Food manufacturing							Retail food stores	Eating and drinking places
	Red meat products	Poultry dressing and processing	Fluid milk	Preserved fruit and vegetables	Grain mill products	Bakery products	Sugar		
					1977 = 100				
1967	74.8	80.6	62.9	73.8	73.0	82.8	77.1	95.5	97.5
1968	76.6	77.9	66.5	75.6	77.0	84.5	80.5	100.5	99.7
1969	75.7	76.8	69.6	76.9	78.3	84.7	78.6	101.2	97.8
1970	77.3	78.3	73.7	79.7	79.7	87.5	85.9	107.0	100.6
1971	79.3	85.5	79.4	83.1	83.3	89.5	84.9	107.6	97.9
1972	85.0	88.1	85.1	84.6	85.5	94.1	90.4	106.7	101.9
1973	82.8	77.5	88.4	93.1	81.7	93.6	96.3	102.3	103.4
1974	84.5	87.3	90.9	91.7	86.4	93.6	93.2	98.0	98.9
1975	84.4	87.9	95.5	93.7	87.1	93.4	94.0	98.8	100.8
1976	93.4	98.6	99.5	100.1	91.1	93.9	95.8	100.8	101.3
1977	100.0	100.0	100.0	100.0	100.0	100.0	100.0	100.0	100.0
1978	98.8	101.3	108.6	104.1	100.2	97.6	98.3	96.0	99.4
1979	101.7	106.1	117.3	98.9	101.0	95.0	103.1	98.3	99.5
1980	107.0	105.7	123.9	100.8	105.1	93.7	100.1	100.3	99.8
1981	107.9	116.4	128.0	99.2	110.9	96.2	98.8	97.1	97.3
1982	112.3	125.6	135.3	107.9	121.0	103.3	90.4	95.5	96.9
1983	115.9	131.7	143.1	110.8	125.5	106.9	98.6	95.2	95.3
1984	117.0	130.3	149.5	112.4	132.8	106.8	99.7	95.6	91.1
1985	119.5	133.2	155.0	113.4	140.9	108.5	105.5	95.8	87.9
1986	117.3	127.3	162.4	118.3	142.1	114.4	110.1	93.7	89.7
1987	115.3	135.4	168.0	116.4	149.6	113.3	125.5	92.7	90.7
1988 1/	--	--	176.1	--	--	--	126.3	91.8	91.3
Average annual change:					Percent				
1967-77	2.9	2.2	4.7	3.1	3.2	1.9	2.6	0.5	0.3
1977-87	1.4	3.1	5.3	1.5	4.1	1.3	2.3	-.8	-1.0

-- = Not available.

1/ Preliminary. Some historical data were revised.

Source: U.S. Department of Labor, Bureau of Labor Statistics.

eating places, and institutions. Food expenditures are broken into two components:

- The farm value is an estimate of the dollar value at the point of sale by farmers of the farm commodities equivalent to food purchased by consumers at food stores and eating places.

- The marketing bill is the difference in dollars between the farm value and consumer expenditures for foods produced on U.S. farms.

Dividing the total marketing bill into costs for several principal marketing functions, such as processing and retailing, and breaking the bill down into costs for principal inputs, such as labor and packaging, can evaluate last year's changes in the marketing bill.

Most of these estimates are based on secondary data, not on direct measures of consumer food expenditures or actual marketing costs, thereby limiting their accuracy. Thus, they are general indicators, not precise measures, of levels and yearly changes.

Food Expenditures

Consumers spent $423 billion for foods originating on U.S. farms in 1989 (fig. 3, and table 17). This amount was less than what all consumers spent for all food because it excluded expenditures for imported food and fishery products.

Figure 3

Distribution of food expenditures

Marketing bill dominates farm value of food expenditures.

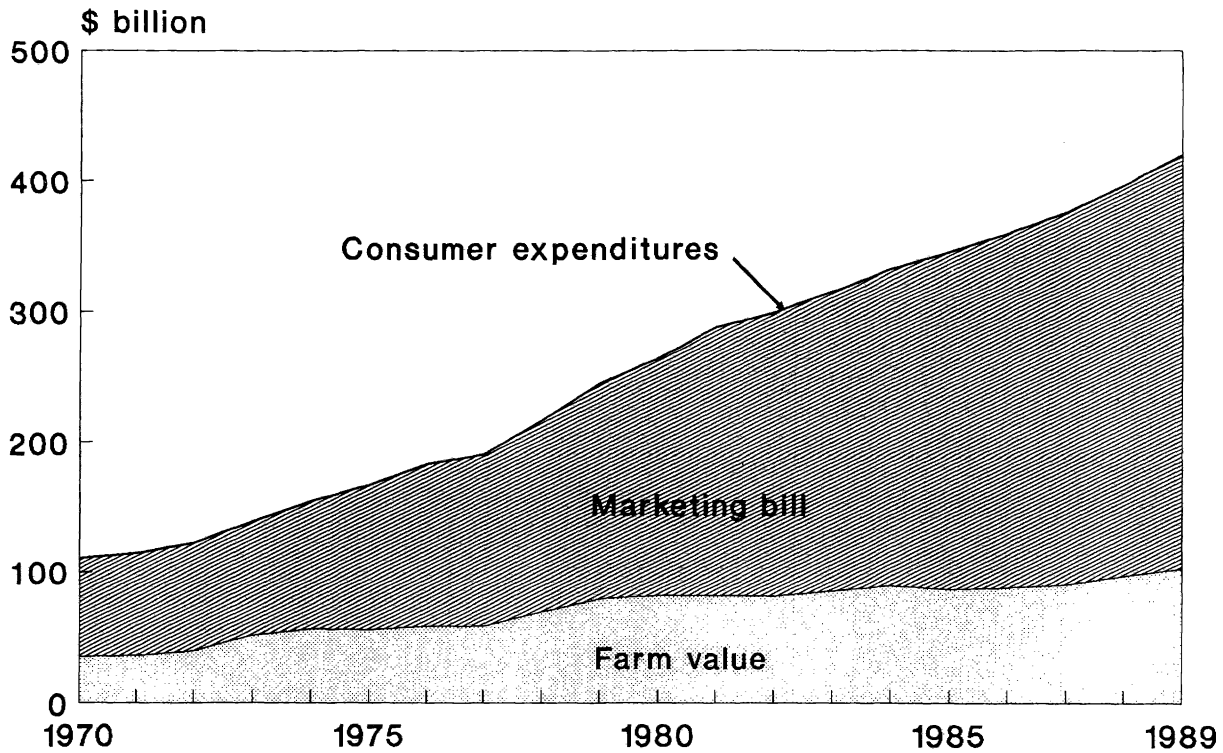

1989 preliminary. Data for foods of U.S. farm origin purchased by or for consumers for consumption both at home and away from home.

Table 17--Marketing bill and farm value components of consumer expenditures for domestically produced foods

Year	Consumer expenditures			Marketing bill	Farm value	Farm value share of expenditures
	Total	At home 1/	Away from home 2/			
	Billion dollars					Percent
1950	44.0	--	--	26.0	18.0	41
1951	49.2	--	--	28.7	20.5	42
1952	50.9	--	--	30.5	20.4	40
1953	51.0	--	--	31.5	19.5	38
1954	51.1	--	--	32.3	18.8	37
1955	53.1	--	--	34.4	18.7	35
1956	55.5	--	--	36.3	19.2	35
1957	58.3	--	--	37.9	20.4	35
1958	61.0	--	--	39.6	21.4	35
1959	63.6	--	--	42.4	21.2	33
1960	66.9	--	--	44.6	22.3	33
1961	68.7	--	--	45.7	23.0	33
1962	71.3	--	--	47.6	23.7	33
1963	74.0	56.0	18.0	49.9	24.1	33
1964	77.5	58.5	19.0	52.6	24.9	32
1965	81.1	60.2	20.9	54.0	27.1	33
1966	86.9	64.0	22.9	57.1	29.8	34
1967	91.6	66.8	24.8	62.4	29.2	32
1968	96.8	69.5	27.3	65.9	30.9	32
1969	102.6	73.1	29.5	68.3	34.3	33
1970	110.6	78.2	32.4	75.1	35.5	32
1971	114.6	80.6	34.0	78.5	36.1	32
1972	122.2	85.4	36.8	82.4	39.8	33
1973	138.8	98.5	40.3	87.1	51.7	37
1974	154.6	109.5	45.1	98.2	56.4	36
1975	167.0	116.2	50.8	111.4	55.6	33
1976	183.3	127.2	56.1	125.0	58.3	32
1977	190.9	130.8	60.1	132.7	58.2	30
1978	216.9	149.2	67.7	147.4	69.5	32
1979	245.2	169.4	75.8	166.0	79.2	32
1980	264.4	180.1	84.3	182.7	81.7	31
1981	287.7	194.0	93.7	206.0	81.7	28
1982	298.9	196.7	102.2	217.5	81.4	27
1983	315.0	204.6	110.4	229.7	85.3	27
1984	332.0	213.1	118.9	242.2	89.8	27
1985	345.4	220.8	124.6	259.0	86.4	25
1986	359.6	226.0	133.6	270.8	88.3	25
1987	375.5	230.2	145.3	285.1	90.4	24
1988	398.8	242.1	156.7	301.9	96.8	24
1989 3/	423.4	258.6	164.8	320.4	103.0	24

-- = Not available.

1/ Includes food primarily purchased at retail foodstores. 2/ Includes food purchased at restaurants, fast-food outlets, and other public eating places, and food served in institutions such as hospitals, schools, and rest homes.
3/ Preliminary. Some historical data have been revised.

About 61 percent of those expenditures was spent at retail grocery stores on food for use at home. The remaining 39 percent represented the retail value of food served by public eating places, hospitals, schools, and other institutions. Market shares in 1989 were unchanged from 1988.

Consumer expenditures for domestic farm foods in 1989 rose about 6.2 percent. The increase in spending came largely from higher food prices. The quantity of food purchases increased very little based on sales data reported by the U.S. Bureau of the Census. Food spending at eating places rose 4.5 percent in 1989. But when adjusted for the rise in prices, 1989 sales were 0.1 percent lower than in 1988. Grocery store sales rose 7.2 percent in 1989, but after adjustment for price increases, sales went up only 0.6 percent. Foodstore sales consist of both food and nonfood items. Sales of nonfood items have been growing faster than food sales and accounted for much of the real growth in 1989. After adjusting for nonfood sales, spending on domestic farm foods at grocery stores increased about 6.8 percent in current dollars, but only about 0.3 percent in real or constant dollars, the measure of volume growth.

Meat products represent the largest share of total retail food expenditures. The retail value of meat in 1989 was 29 percent of total food expenditures, compared with 22 percent for fruit and vegetables, the next largest expenditure group (table 18). Because food consumption changes slowly, the proportion of expenditures accounted for by meat products and other food groups has changed little from year to year.

Farm Value

The farm value of food commodities originating on U.S. farms increased about $6 billion in 1989 to $103 billion. The increase was the largest in 10 years. Higher farm prices for poultry, milk, and eggs accounted for much of the rise in farm value. The largest share of the money received by farmers for domestic food sales was for meat products. In 1989, the farm value of meat was about 33 percent of the total farm value of foods. The next largest share, 19 percent, was for dairy products. Livestock and dairy producers garnered more than half of the total farm value, but they bought substantial amounts of grain from crop farmers.

The farm value of food commodities represented 24 percent of consumer expenditures for farm foods in 1989, unchanged from the previous 2 years. The farm value is a much smaller part of expenditures for food eaten away from home than for food bought at stores because the cost of preparing and serving food is a huge part of the cost of food eaten away from home. The 1989 farm value accounted for about 16 percent of expenditures for food consumed away-from-home, compared with about 30 percent of expenditures for farm foods in foodstores.

Marketing Bill

The marketing bill, the difference between what consumers spent for food and the farm value of the food, amounted to $320 billion in 1989, $18 billion more than in 1988. This increase in the marketing bill accounted for 75 percent of the rise in consumer expenditures.

The 6-percent increase in the marketing bill in 1989 was due to higher prices of most inputs and greater use of some inputs, particularly labor. Higher labor costs accounted for about 48 percent of last year's increase in the marketing bill, about the same proportion as in 1988. Much of the remaining

Table 18--Consumer expenditures and farm value for major food groups

Item and year	Meat	Fruit and vegetables 1/	Dairy products	Bakery products	Poultry	Grain mill products 2/	Eggs	Other foods 3/	Total
				Billion dollars					
Consumer expenditures:									
1975	48.0	35.6	23.3	18.2	8.6	5.9	4.1	23.3	167.0
1976	55.2	38.8	26.4	18.8	9.1	6.1	4.8	24.1	183.3
1977	59.0	40.8	27.8	18.1	9.6	6.3	4.4	24.9	190.9
1978	69.5	46.3	30.1	21.1	10.9	6.4	4.3	28.3	216.9
1979	80.2	52.5	33.5	23.8	12.6	7.8	4.8	30.1	245.3
1980	83.3	55.5	37.8	26.8	13.3	8.4	5.0	34.3	264.4
1981	86.6	62.8	41.4	29.0	14.7	8.9	5.2	39.1	287.7
1982	91.9	66.7	42.0	30.6	15.1	9.0	5.2	38.4	298.9
1983	97.9	70.0	45.0	31.0	16.3	9.6	5.4	39.8	315.0
1984	101.7	74.7	47.4	33.0	18.4	10.3	5.8	40.7	332.0
1985	103.2	78.5	49.4	34.6	19.9	10.9	6.1	42.8	345.4
1986	106.3	81.6	51.4	36.6	21.2	11.7	6.4	44.4	359.6
1987	110.0	84.7	54.0	37.8	22.8	12.1	6.6	47.5	375.5
1988	117.4	89.3	56.0	41.5	24.7	13.2	6.6	50.1	398.8
1989	122.7	95.1	58.7	45.2	26.9	14.3	6.7	53.8	423.4
Farm value:									
1975	20.6	8.4	10.0	3.0	4.1	1.1	2.2	6.2	55.6
1976	21.6	8.8	11.3	2.6	4.0	1.0	2.6	6.4	58.3
1977	22.0	8.6	11.5	2.3	4.2	.9	2.3	6.4	58.2
1978	28.0	10.0	12.7	2.8	5.1	1.0	2.2	7.7	69.5
1979	31.5	10.9	14.6	3.4	5.5	1.4	2.6	9.3	79.2
1980	30.8	11.7	16.0	3.5	5.9	1.6	2.5	9.8	81.7
1981	31.1	11.8	17.0	3.4	6.1	1.5	2.7	8.1	81.7
1982	31.5	11.5	16.7	3.4	6.0	1.4	2.5	8.4	81.4
1983	31.4	12.9	18.0	3.5	6.6	1.4	2.7	8.8	85.3
1984	32.4	13.5	18.1	3.7	8.0	1.4	3.0	9.7	89.8
1985	30.5	13.3	17.7	3.4	7.9	1.3	2.3	10.0	86.4
1986	30.9	14.6	17.8	2.9	9.0	1.1	2.5	10.0	88.8
1987	32.7	14.3	18.2	2.8	8.1	1.0	2.2	11.1	90.4
1988	33.5	16.2	17.9	3.6	9.9	1.3	2.2	12.2	96.8
1989	34.0	17.6	19.6	4.4	11.3	1.5	2.8	11.8	103.0

1/ Also includes soup, baby foods, condiments, dressings, spreads, and relishes. 2/ Includes flour, flour mixes, cereal, rice, and pasta. 3/ Includes fats and oils, sugar, tree nuts, peanuts, and miscellaneous foods.

increase in the marketing bill occurred in food packaging materials and other costs, including such items as advertising and promotion, taxes and insurance, and professional services.

Small increases in transportation and energy costs and greater industry efforts to control labor and other costs have slowed the rise in the marketing bill in recent years. Although the rise slowed during the 1980's, marketing costs continued to be the most persistent source of rising food expenditures. Consumer expenditures for farm foods have increased $178 billion since 1979. About $154 billion of this increase consists of marketing charges. Farm value has increased only $24 billion since 1979.

What the Marketing Bill Bought

Looking first at four broad functions that the food industry performs--processing, wholesaling, transporting, and retailing--and then at the specific cost items that add up to the marketing bill, one gets a clearer idea of what is represented by last year's marketing bill.

Costs of the functions performed are different for food bought in foodstores than for meals and snacks purchased for consumption away from home (table 19). About 30 cents of each dollar spent in foodstores paid for the farm value in 1988. Thus, 70 cents paid the marketing bill for food eaten at home.

Of each dollar value for food bought in foodstores, 31 cents paid for processing. Between processor and retailer, another 10 cents was spent for wholesaling and 6 cents for intercity transportation. Finally, retailing charges added the last 23 cents (fig. 4). These shares have not changed much over the years.

Figure 4

Marketing functions of the food dollar

Processing costs are the largest marketing function for food eaten at home.

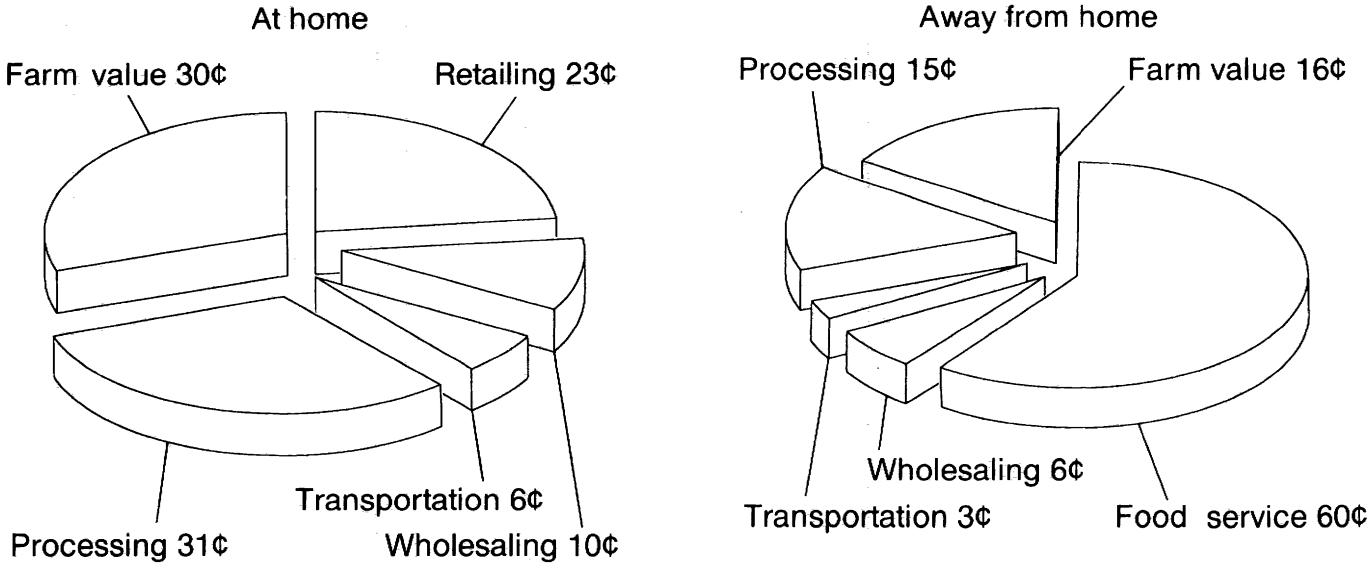

1989 data.

Table 19--Marketing function components of consumer expenditures

Expenditures and components	1980	1981	1982	1983	1984	1985	1986	1987	1988	1989
					Billion dollars					
Expenditures at foodstores	180.1	194.0	196.7	204.6	213.1	220.8	226.0	230.2	242.1	258.6
Farm value	65.9	65.4	64.1	66.5	69.5	66.6	67.6	67.5	72.5	76.6
Marketing bill	114.2	128.6	132.6	138.1	143.6	154.2	158.4	162.7	169.6	182.0
Processing cost	53.9	60.1	60.9	62.2	64.1	69.5	70.2	72.1	75.6	81.3
Intercity transportation cost	10.5	11.6	11.9	12.3	12.8	13.3	13.4	14.0	13.8	14.3
Wholesaling cost	15.7	17.7	20.0	20.5	21.5	22.3	22.5	23.2	24.3	26.0
Retailing cost	34.1	39.2	39.8	43.1	45.2	49.1	52.3	53.4	55.9	60.4
Expenditures for eating away from home	84.3	93.7	102.2	110.4	118.9	124.6	133.6	145.3	156.7	164.8
Farm value	15.8	16.3	17.3	18.8	20.3	19.8	21.2	22.9	24.3	26.4
Marketing bill	68.5	77.4	84.9	91.6	98.6	104.8	112.4	122.4	132.4	138.4
Processing cost	12.4	13.6	14.7	15.6	16.7	18.9	20.8	21.8	24.1	24.7
Intercity transportation cost	2.5	2.7	3.0	3.1	3.2	3.3	3.4	3.6	3.9	4.3
Wholesaling cost	4.7	5.3	5.9	6.6	7.1	7.5	8.0	8.6	9.5	9.9
Foodservice cost	48.9	55.8	61.3	66.3	71.6	75.1	80.2	88.4	94.9	99.5

1/ Preliminary. Data for 1988 have been revised.

For each dollar spent for food away from home, 16 cents covered the farm value. Processing costs accounted for 15 cents, transportation charges for 3 cents, and wholesaling for 6 cents. Thus, 60 cents was for food service or the preparing and serving of food eaten away from home.

The food processing and marketing industry is an important part of the American economy. The $320 billion the industry received from consumers in 1989 paid the wages and salaries of millions of employees and paid for all of the other costs of doing business.

Labor: The Largest Cost

Direct labor costs, the largest part of the marketing bill, amounted to about $147 billion in 1989, or 35 percent of food expenditures (fig. 5 and table 20). Labor costs consist of wages and salaries, employee benefit costs such as group health insurance, estimated earnings of proprietors and family workers, and tips for food service. Direct labor costs do not include the costs of labor engaged in for-hire transporting of foods or in manufacturing and distributing supplies used by industries.

Labor costs of the food industry rose about 6.5 percent in 1989, slightly more than in 1988. The increase reflected rising employment in the food industry and increases in employee compensation. Food retailing employment climbed 5.5 percent, many being part-time, reflecting the continued growth of service departments in supermarkets, such as delicatessens, salad bars, and bakeries. Employment rose 2 percent in eating places and more than 1 percent in the food manufacturing industry. The total number of persons employed in the food industry rose about 3 percent in 1989. About 12 million workers were employed in processing and distributing food in 1989. More than half, or about 6.5 million people, were employed in away-from-home eating places in 1989. Foodstores employed 3 million people, food processors employed 1.7 million people, and food wholesalers about 0.8 million people.

Packaging Costs

Food containers and packaging materials, the second largest food marketing cost, totaled $35 billion in 1989, about 8.5 percent of total food expenditures. Costs in 1989 rose 8 percent above 1988 levels, partly reflecting greater use of plastics and other packaging materials by the food industry. Prices of paperboard boxes and food containers also rose 4 percent.

Paperboard boxes and containers are the largest packaging cost. The food industry spent nearly $14 billion, or about 40 percent of total packaging expenses, on paper and paperboard products in 1989. Fiber (cardboard) boxes, the primary container used to ship nearly all processed foods, represented about 33 percent of total packaging expenses. Sanitary food containers, including those for such products as fluid milk, margarine and butter, ice cream, and frozen food, cost almost a third as well. The third-largest paperboard item was folding boxes used for such dry foods as cereal and perishable bakery products.

Metal containers are next in importance, making up about 20 percent of total food packaging costs. Cans have become less important for food packaging because of the increased popularity of glass and plastic bottles, the year-round availability of fresh fruit and vegetables, and the increased use of microwaveable dishes for frozen foods.

Costs of plastic containers and wrapping materials are nearly 20 percent of food packaging costs. Plastic is an important source of trays for meat and produce, bottles for milk and fruit juices, jars and tubs for cottage cheese and other dairy products, and flexible wrapping materials, such as polyethylene film for protective covering of baked goods, meat, and produce.

Transportation Costs

Intercity truck and rail transportation costs for farm foods were about $18.5 billion in 1989, making up 4.5 percent of retail food expenditures. Larger food marketings and slightly higher rates boosted costs more than 4 percent last year.

Energy Costs

Last year's energy bill for food marketing came to about $16 billion, making up about 3.5 percent of retail food expenditures. Costs were moderately higher in 1989, due mainly to the expanded size of the food industry. During 1973-82, fuel and electricity costs in the food industry rose more than 1.5 times the annual rate of other costs, reflecting the dramatic rise in energy

Figure 5

What a dollar spent on food paid for in 1989

About half of the marketing bill pays labor costs.

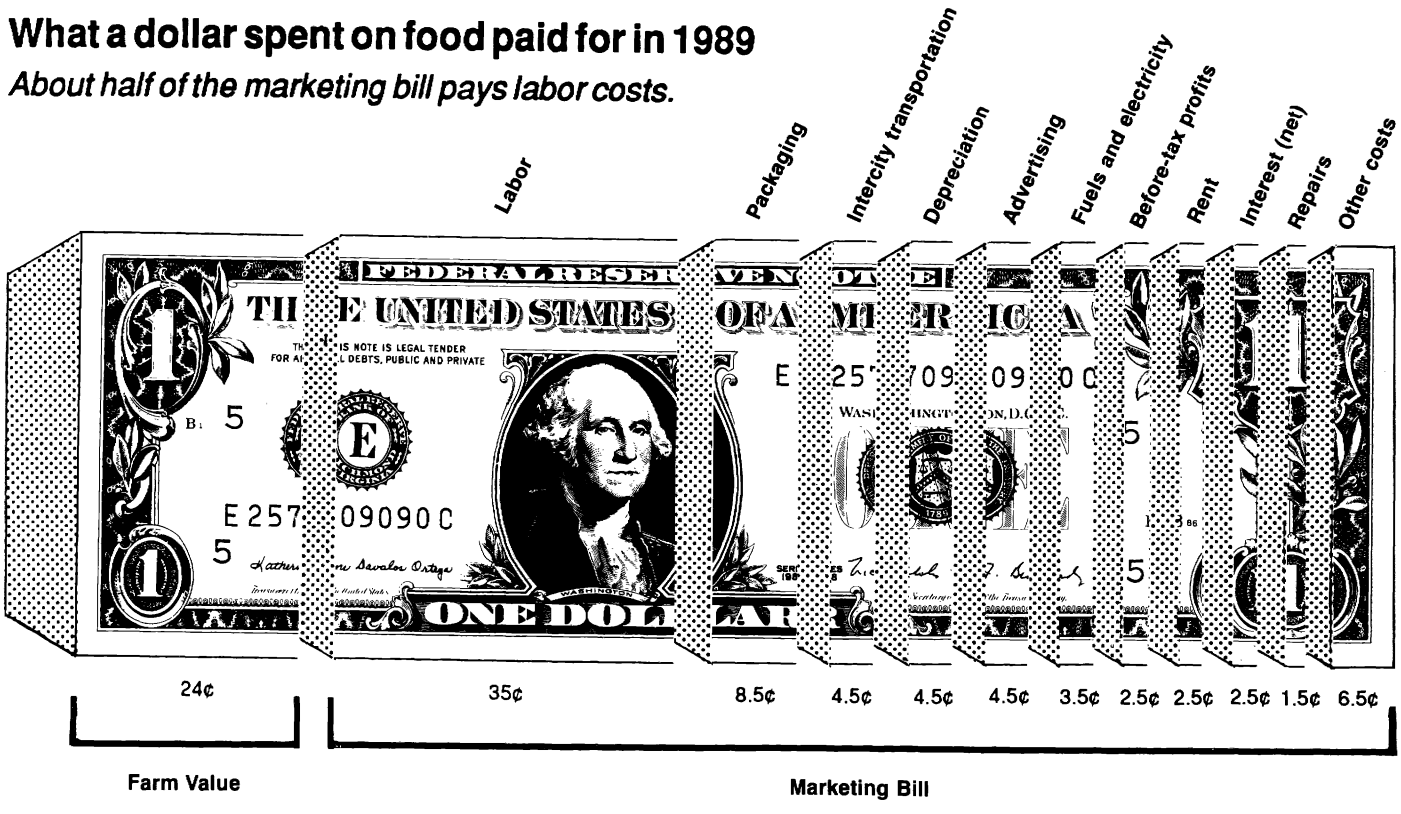

Includes food eaten at home and away from home. Other costs include property taxes and insurance, accounting and professional services, promotion, bad debts, and many miscellaneous items.

Table 20--Components of the marketing bill for domestically produced farm foods

Year	Labor 1/	Packaging materials	Intercity rail and truck transportation	Fuels and electricity	Corporate profits before taxes	Other 2/	Total marketing bill 3/
				Billion dollars			
1967	25.9	7.3	4.3	--	3.4	21.5	62.4
1968	28.0	7.6	4.5	--	3.6	22.2	65.9
1969	30.4	7.9	4.6	--	3.6	21.8	68.3
1970	32.2	8.2	5.2	2.2	3.6	23.7	75.1
1971	34.5	8.5	6.0	2.4	3.9	23.2	78.5
1972	36.6	8.9	6.1	2.5	4.0	24.3	82.4
1973	39.7	9.4	6.4	2.8	5.4	23.4	87.1
1974	44.3	11.8	7.5	3.7	6.1	24.8	98.2
1975	48.3	13.3	8.4	4.6	7.1	29.7	111.4
1976	53.8	14.5	9.1	5.0	7.7	34.9	125.0
1977	58.3	15.1	9.7	6.0	8.0	35.6	132.7
1978	66.2	16.6	10.5	7.1	9.9	37.1	147.4
1979	75.2	18.6	11.8	8.2	10.0	42.3	166.1
1980	81.5	21.0	13.0	9.0	9.9	48.3	182.7
1981	91.0	22.6	14.3	10.0	9.7	58.4	206.0
1982	96.6	23.7	14.7	11.0	9.3	62.2	217.5
1983	102.4	24.7	15.4	11.7	9.6	65.9	229.7
1984	109.3	26.2	15.9	12.5	9.6	68.7	242.2
1985	115.6	26.9	16.5	13.1	10.5	76.4	259.0
1986	122.9	27.7	16.8	13.2	9.9	80.3	270.8
1987	130.0	29.9	17.2	13.6	10.4	84.0	285.1
1988	137.9	32.4	17.8	14.4	11.3	88.2	302.0
1989	146.7	35.1	18.6	15.8	11.1	93.1	320.4

-- = Not available.

1/ Includes employee wages or salaries and their health and welfare benefits. Also includes estimated earnings of proprietors, partners, and family workers not receiving stated remuneration. 2/ Includes depreciation, rent, advertising and promotion, interest, taxes, licenses, insurance, professional services, local for-hire transportation, food service in schools, colleges, hospitals, and other institutions, and miscellaneous items. Data for 1967-69 also include fuels and electricity. 3/ The marketing bill is the difference between the farm value and consumer expenditures for these foods both at foodstores and away-from-home eating places. Thus, it covers processing, wholesaling, transportation, and retailing costs and profits. Some historical data were revised.

prices. However, the overall rise in energy costs has been similar to other costs over the past 5 years, including 1989.

This energy bill counted only the costs of electricity, natural gas, and other fuels used in food processing, wholesaling, and retailing, including foodservice at eating places. The energy bill excluded transportation fuel costs, except for those incurred for food wholesaling.

Public eating places and other foodservice facilities incur more than a third of the fuel and electricity costs of food marketing. These energy expenses have risen because of the relatively large growth of the away-from-home food market. Also, away-from-home foodservice has the highest energy costs per dollar of sales, averaging about 3.8 percent.

Food retailing and processing have each accounted for about 25 percent of food marketing's fuel and electricity costs. Energy costs rose compared with other retailing costs in the early 1980's, but have leveled off the past several years. The major portion of the food retailing energy bill is electricity used to operate refrigeration equipment.

Other Costs Added Up

The major costs just discussed total about 67 percent of the 1989 food marketing bill. The rest of the bill included a variety of other costs (29 percent of the total) and profits (about 4 percent). Although most such costs were small individually, they added to $93 billion. These costs included depreciation, rent, advertising and promotion, repairs, bad debts, contributions, property taxes and insurance, interest, and the nonfood costs involved in providing foodservice in schools, hospitals, and other institutions. Some of these other costs are estimated using data from trade publications, the Internal Revenue Service, and the Bureau of the Census.

The largest of these costs are plant and equipment rent and depreciation (about 7 percent of total consumer expenditures), media--television, radio, and newspaper--advertising expenditures (about 4.5 percent of food expenditures), net interest (about 2.5 percent of expenditures), and repairs (1.5 percent of expenditures).

Sufficient data are not available for estimating many individual smaller costs, such as taxes and insurance, for-hire local truck transportation, professional services, and foodservice in schools and institutions. Together, these costs account for about 6.5 percent of the food dollar.

Corporate Profits

Before-tax profits that firms earned from marketing foods of U.S. farm origin were estimated at $11 billion for 1989, practically the same as in 1988. Food industry sales rose in 1989, but profit margins were lower in food manufacturing and the fast-food industry, resulting in little change in industry profits. The profit estimate was made by multiplying sales for food retailers, wholesalers, manufacturers, and public eating places by profit rates per dollar of sales derived from IRS data from corporation income tax returns. Profits of the food industry last year were about 2.5 percent of food spending.

Food Spending in Relation to Income

Food spending has increased considerably over the years, but the increase has not matched the gain in disposable income. As a result, the percentage of income spent for food has declined (table 21). In 1929, the first year data of this type were recorded, 24 percent of disposable income was spent for food. This percentage has since tapered off fractionally almost every year. By 1970, the percentage had dropped to 14.2 percent. During the 1970's, the percentage held fairly constant because of high food-price inflation. By 1980, food spending was still 13.9 percent of disposable income, but has since declined steadily to a low of 11.8 percent in 1989.

The decline in the percentage of income spent for food is the direct result of the inelastic nature of the aggregate demand for food. This phenomenon was noted in the 19th century by Ernest Engel. Engel observed that as income rises, the proportion of income spent for food declines. This decline occurs because expenditures for food require a large share of income when income is low. But as income rises, the desire for nonfood items exceeds the desire for additional food. A decline in this percentage reflects a highly developed economy in which there is money to spend on personal services and other discretionary items. Some of these additional services ordinarily are purchased along with food. This reasoning largely explains the slight increase in the percentage of income spent on food away from home.

The percentage of income spent for food varies widely among households of different sizes and income. For instance, data from the 1988 Consumer Expenditure Survey conducted by the U.S. Department of Labor showed that the percentage of after-tax income spent for food was 14.5 percent for households with incomes of $30,000-$39,999, but was 28.9 percent for households with incomes of $5,000-$9,999.

The estimates of food expenditures in table 21, developed by ERS, differ from the U.S. Department of Commerce estimates of personal consumption expenditures (PCE) previously used to compute the percentage of disposable personal income (DPI) spent for food. The trend in food expenditures is similar, but the ERS series shows a lower level of spending for food than does the PCE series, particularly for food purchased at grocery stores and other retail outlets for consumption at home. The ERS estimate of at-home expenditures is lower partly because it excludes pet food, ice, and prepared feeds, which are included in PCE estimates. ERS estimates also deduct more from grocery store sales for nonfoods, such as drugs and household supplies, in arriving at the estimate of food purchases for at-home consumption.[1]

Food Price Highlights

Higher prices for poultry, eggs, milk, and fresh fruit and vegetables heavily contributed to the rise in the CPI for food in 1989. Farm value also rose for most of these commodities, reflecting strong demand and carryover effects of the 1988 drought. The farm-to-retail price spread increased for all foods.

---

[1] Alden Manchester described the new ERS expenditure series in Developing an Integrated Information System for the Food Sector, AER-575, U.S. Dept. Agr., Econ. Res. Serv., Aug. 1987.

Table 21--Food expenditures by families and individuals as a share of disposable personal income

Year	Disposable personal income	Expenditures for food: At home 1/	Expenditures for food: Away from home 2/	Expenditures for food: Total	Proportion of income spent for food: At home	Proportion of income spent for food: Away from home	Proportion of income spent for food: Total
	Billion dollars	Million dollars			Percent		
1929	81.7	16,918	2,617	19,535	20.7	3.2	23.9
1939	69.7	12,952	2,289	15,241	18.6	3.3	21.9
1949	187.9	33,774	7,768	41,542	18.0	4.1	22.1
1959	344.6	49,291	12,137	61,428	14.3	3.5	17.8
1961	373.8	51,069	13,100	64,169	13.7	3.5	17.2
1962	396.2	51,996	13,897	65,893	13.1	3.5	16.6
1963	415.8	52,374	14,546	66,920	12.6	3.5	16.1
1964	451.9	54,530	15,685	70,215	12.1	3.5	15.6
1965	486.8	57,382	16,946	74,328	11.8	3.5	15.3
1966	525.9	59,884	18,636	78,520	11.4	3.5	14.9
1967	562.1	60,254	19,776	80,030	10.7	3.5	14.2
1968	609.6	63,510	21,723	85,233	10.4	3.6	14.0
1969	656.7	67,956	23,362	91,318	10.3	3.6	13.9
1970	715.6	74,166	27,377	101,543	10.4	3.8	14.2
1971	776.8	78,074	28,967	107,041	10.1	3.7	13.8
1972	839.6	84,441	31,807	116,248	10.0	3.8	13.8
1973	949.8	93,133	36,019	129,152	9.8	3.8	13.6
1974	1,038.4	105,374	39,905	145,279	10.2	3.8	14.0
1975	1,142.8	115,087	47,362	162,449	10.1	4.1	14.2
1976	1,252.6	122,949	53,995	176,944	9.8	4.3	14.1
1977	1,379.3	131,616	60,148	191,764	9.5	4.4	13.9
1978	1,551.2	144,991	68,916	213,907	9.4	4.4	13.8
1979	1,729.3	161,674	78,859	240,623	9.3	4.6	13.9
1980	1,917.9	178,421	87,965	266,386	9.3	4.6	13.9
1981	2,127.6	190,284	98,628	288,912	8.9	4.6	13.5
1982	2,261.4	197,714	107,681	305,395	8.7	4.8	13.5
1983	2,428.1	207,840	116,958	324,798	8.6	4.8	13.4
1984	2,668.6	219,335	126,453	345,788	8.2	4.7	12.9
1985	2,838.7	228,440	133,391	361,831	8.0	4.7	12.7
1986	3,013.3	235,544	143,446	378,990	7.8	4.8	12.6
1987	3,205.9	242,940	157,281	400,221	7.6	4.9	12.5
1988	3,477.8	255,910	163,522	419,432	7.4	4.7	12.1
1989	3,778.8	272,465	173,423	445,888	7.2	4.6	11.8

1/ Includes food purchases from grocery stores and other retail outlets, including purchases with food stamps and food produced and consumed on farms, because the value of these foods is included in personal income. Excludes Government-donated foods. 2/ Includes purchases of meals and snacks by families and individuals, and food furnished employees because it is included in personal income. Excludes food paid for by government and business, such as food donated to schools, meals in prisons and other institutions, and expense-account meals.

Choice Beef

Retail prices increased sharply in 1989 for the third consecutive year (table 22). The 1989 weighted average price of Choice beef, the highest yearly average on record, was $2.70 per pound, 15 cents higher than in 1988, and 39 cents higher than in 1986.

Prices at retail increased during 1989 from $2.64 per pound in January to a high of $2.74 in December. Prices of individual cuts ranged from an annual average of $1.44 per pound for ground beef to $5.07 per pound for T-bone steak.

Table 22--Choice beef and pork: Retail price, farm value, and farm-to-retail price spread

Item	Retail price 1/	Net carcass value 2/	Net farm value 3/	Price spreads: Farm-to-retail	Price spreads: Carcass-to-retail 4/	Price spreads: Farm-to-carcass 5/	Farm value share 6/
	Cents per retail pound						Percent
Choice beef:							
1980	237.6	155.4	145.0	92.6	82.2	10.4	61
1981	238.7	149.3	138.5	100.2	89.4	10.8	58
1982	242.5	150.7	140.5	102.0	91.8	10.2	58
1983	238.1	145.4	136.2	101.9	92.7	9.2	57
1984	239.6	147.6	140.0	99.6	92.0	7.6	58
1985	232.6	135.2	126.8	105.8	97.4	8.4	55
1986	230.7	133.1	124.4	106.3	97.6	8.7	54
1987	242.5	145.3	137.9	104.6	97.2	7.4	57
1988	254.7	153.9	147.4	107.3	100.8	6.5	58
1989	269.9	160.6	155.4	114.5	109.3	5.2	58
Pork:							
1980	139.4	98.0	63.2	76.2	41.4	34.8	45
1981	152.4	106.7	70.3	82.1	45.7	36.4	46
1982	175.4	121.8	88.0	87.4	53.6	33.8	50
1983	169.8	108.9	76.5	93.3	60.9	32.4	45
1984	162.0	110.1	77.4	84.6	51.9	32.7	48
1985	162.0	101.1	71.4	90.6	60.9	29.7	44
1986	178.4	110.9	82.4	96.0	67.5	28.5	46
1987	188.4	113.0	82.7	105.7	75.4	30.3	44
1988	183.4	101.0	69.4	114.0	82.4	31.6	38
1989	182.9	99.2	70.4	112.5	83.7	28.8	38

1/ Composite of all cuts. 2/ For quantity equivalent to 1 retail pound: beef, 1.48 pounds of carcass beef; pork, 1.06 pounds of wholesale cuts. 3/ For quantity of live animal equivalent to 1 retail pound, minus byproduct allowance: beef, 2.4 pounds; pork, 1.7 pounds. 4/ Includes retailing, meat fabricating, wholesaling, and intracity transportation. 5/ Charges for livestock processing and transporting of meat to city where consumed. 6/ Percentage of retail price.

The farm value increased about 7 cents less than the retail price from 1988 to 1989. But, the farm value averaged 58 percent of the retail price of beef in 1989, the same as in 1988. The farm value is computed from the average of terminal and direct market prices for Choice steers, yield grade 3, in eight markets. Prices per pound of slaughter steers are multiplied by 2.4 pounds, the quantity of live animal required to sell 1 pound of Choice beef at retail. We then estimate the value of byproducts, principally the hide, obtained from the slaughtered animal. We subtract this byproduct value to obtain the farm value of the meat alone.

The farm-to-retail price spread for Choice beef last year increased 7 cents to an average of $1.14 per pound. The spread varied from a high of $1.27 in September to a low of $1.06 in March and April. The price spread for beef had been nearly stable since 1985, but even with the 1989 increase, the spread was only 13 percent higher last year than in 1981-84.

The spread pays for various beef processing and marketing functions. The slaughtering function, representing all of the activities performed from the time the packer purchased the cattle until the carcasses were shipped from the packing plant, decreased again in 1989 (table 23). Many packers cut beef carcasses into primals, subprimals, and retail cuts, but the estimated spread for slaughtering assumes that the beef is sold in carcass form. The slaughtering value is obtained by deducting the farm value and the estimated

Table 23--Choice beef and pork: Farm value, marketing costs by function, and retail price

Item	1985	1986	1987	1988	1989
	Cents per retail pound				
Beef:					
Farm value	126.8	124.4	123.9	147.4	155.4
Slaughtering	4.5	4.9	3.6	2.8	1.5
Breaking carcass	12.3	12.5	13.0	13.5	14.2
Intercity transportation	.9	3.8	3.8	3.7	3.7
Warehousing and store delivery	15.3	15.2	16.0	16.8	17.8
Cutting and merchandising	69.8	69.9	68.2	70.5	77.3
Retail price	232.6	230.7	242.5	254.7	269.9
Pork:					
Farm value	71.4	82.4	82.7	69.4	70.4
Slaughtering and processing	26.1	25.0	26.8	28.2	25.4
Intercity transportation	.6	3.5	3.5	3.4	3.4
Warehousing and store delivery	10.7	11.7	12.4	12.1	12.0
Cutting and merchandising	50.2	55.8	63.0	70.3	71.7
Retail price	162.0	178.4	188.4	183.4	182.9

transportation costs for the carcass (from the packer to the city where consumed) from an average wholesale value of Choice steer carcasses (600-700 pounds, yield grade 3). Thus, the estimate is derived from price differences and is not a compilation of costs. The lower slaughtering value in recent years may reflect downward pressure on wages and gains in productivity in the meatpacking industry.

The price spread for breaking the carcass into principal parts, such as the loin and chuck, which could be done at the packing plant, at the wholesale level, or by the retailer, was estimated at 14.2 cents per pound in 1989. Transportation of beef from the packer to the retail marketing area amounted to 3.7 cents per retail pound in 1989. Warehousing and store delivery were estimated at 17.8 cents per pound at retail. This estimate is based on data reported in the 1982 Census of Wholesale Trade, which indicated that these costs represented 8.3 percent of gross sales by meat wholesalers.

Cutting and retail merchandising of Choice beef cost 77 cents per pound in 1989. This amount represents the difference between the total of all other spreads and the retail price.

Data for 1984-89 indicate a slow upward trend in the spread for breaking the carcass and cutting and merchandising the beef. The increases reflect the effect of inflation on marketing costs. In contrast, slaughtering costs have varied considerably, partly because of changes in byproduct values, an increasing shift to boxed beef, and a different allocation of returns between the cutting and slaughtering functions. Changes in the quality, supply and demand, and price reporting of carcass beef may also affect the carcass price series used in deriving the slaughtering spread.

Pork

Retail pork prices averaged $1.83 in 1989, the same as in 1988, but 5 cents lower than in 1987 (table 22). Per capita pork supplies were down slightly in 1989, but larger poultry supplies limited price strength for pork. The farm value increased 1 cent from its 1988 level, averaging 70 cents per retail pound equivalent. The farm value share remained at 38 percent.

Farm value is computed from the average price of barrows and gilts at seven midwestern markets. This price is then multiplied by 1.7 pounds, the quantity of live animals needed to sell 1 pound of pork at retail. A value for lard and other byproducts is subtracted to obtain the net farm value.

The farm-to-retail price spread for pork declined to $1.12 per pound in 1989. Since a large decrease in 1984 when retail pork prices sharply declined, the spread has gone up 28 cents, consisting of a 21-cent rise in retail pork prices and the 7-cent decline in farm value.

Among components of the farm-to-retail spread for pork, the slaughtering and processing functions amounted to 25 cents in 1989, 3 cents less than in 1988 (table 23). This spread represents charges for cutting the carcass into primals and processing hams, bacon, and other products. We estimated this spread by deducting the farm value and intercity transportation costs from a composite wholesale price of pork.

The transportation price spread for pork between the packer and retail marketing area was 3.4 cents per pound in 1989. The warehousing and store

delivery spread was estimated at about 12 cents per retail pound in 1989, nearly the same as the previous 3 years.

The cutting and retail merchandising price spread of about 72 cents made up the largest component of the farm-to-retail price spread for pork. This figure was 2 cents higher in 1989 than in 1988, and had increased about 7 cents in 1987-88. The retail cutting and merchandising component is derived as a residual between the total of all other functions and the retail price. The increase in this spread may be partly explained by cost inflation and the time lag between changes in farm, wholesale, and retail prices.

Broilers

Broiler prices rose at both the farm and retail levels in 1988, mainly reflecting added demand pressure from fast-food restaurants. For the second consecutive year, retail prices rose 7 cents per pound. There was only a 3-cent rise in farm value in 1989, but it had gone up 8 cents in 1988. Thus, the marketing spread, which declined slightly in 1988, rose about 4 cents in 1989. The spread was stable from 1981 to 1986, averaging 33.5 cents per pound (table 24). In 1987, the spread increased about 4 cents due to an apparent increase in the retailing margin. Broiler processing costs have not increased much because gains in efficiency have largely offset rising labor and other input costs.

Per capita consumption of chicken continued to climb to a new high of 50 pounds (boneless weight) in 1989, 2.5 pounds more than in 1988. Consumption rose an average of 1.2 pounds per capita per year during the 1980's. Chicken and other poultry represented 35 percent of all meat consumed in the United States in 1989, up from 26 percent in 1979.

Much of the demand for broilers is for further processed products. Broiler producers are cutting chicken into parts, and most producers are further processing chicken into fillets, nuggets, and other value-added products according to buyer's specifications. The processor generally realizes a more favorable gross margin and increased volume from this further processing. Most of these products are served through fast-food and institutional outlets, but considerable volumes of chicken parts are sold through retail stores for home consumption. These further processed products are not included in farm-to-retail price spread computations, but they represent a source of market strength that supported prices in 1989 while consumption sharply rose.

Eggs

Smaller egg supplies caused egg prices to soar in 1989. For the year, prices averaged $1.00 per dozen of grade A large, 21 cents higher than the 1988 price (table 24). While egg production was 3.5 percent lower, the price increase appears too large to be caused by supply alone. Some of the increase may reflect continued strong demand for eggs in processed form. The farm value of eggs rose 19 cents per dozen, almost as much as the retail price.

For eggs, the price spread between farm value and retail price slightly widened to 35 cents per dozen. As the price spread for most foods has risen, the price spread for eggs has been very stable the past decade, averaging about 33 cents per dozen. Half of the spread is usually the retailer margin, which was 17 cents per dozen in 1989.

Table 24--Broilers and eggs: Farm value, marketing costs by function, and retail price

Item	Farm value 1/	Marketing functions: Assembly and procurement	Processing	Intercity transportation	Wholesaling	Retailing	Retail price
	Cents						
Broilers, ready-to-cook, whole (pound):							
1975	37.0	1.4	7.5	1.4	3.9	12.0	63.2
1976	32.6	1.1	7.8	1.3	3.7	13.2	59.7
1977	33.0	1.1	8.0	1.4	3.7	12.9	60.1
1978	36.8	1.2	8.7	1.4	3.8	14.6	66.5
1979	36.8	1.3	9.6	1.6	4.2	14.5	68.0
1980	39.4	1.4	9.8	1.7	4.3	14.3	70.9
1981	39.4	1.6	10.3	1.7	4.3	15.9	73.2
1982	37.8	1.6	10.4	1.7	4.3	15.6	71.4
1983	41.2	1.6	10.5	1.7	4.3	13.2	72.5
1984	46.7	1.6	10.8	1.7	4.4	15.8	81.0
1985	42.4	1.6	9.3	1.7	4.4	16.9	76.3
1986	49.0	1.6	9.1	1.7	4.4	17.7	83.5
1987	40.2	1.6	9.1	1.7	4.4	21.5	78.5
1988	48.1	1.6	9.1	1.7	4.4	20.5	85.4
1989	51.4	1.6	9.5	1.8	4.5	23.9	92.7
Eggs, Grade A, large (dozen):							
1975	50.8	1.2	9.3	1.5	3.7	10.5	77.0
1976	58.0	.9	9.6	1.4	3.5	11.5	84.9
1977	53.8	.9	10.3	1.5	3.5	12.3	82.3
1978	49.7	.9	10.5	1.6	3.4	12.4	78.5
1979	53.7	1.1	11.7	1.8	3.9	13.7	85.9
1980	51.0	1.2	12.4	1.9	4.1	13.7	84.3
1981	56.9	1.2	12.2	1.9	4.1	13.6	89.9
1982	54.5	1.2	12.2	1.9	4.1	12.8	86.7
1983	59.5	1.0	11.6	1.7	3.5	12.1	89.4
1984	66.0	1.0	12.1	1.5	3.7	16.2	100.5
1985	51.4	1.0	11.0	1.5	3.7	11.8	80.4
1986	55.4	1.0	11.0	1.5	3.7	14.4	87.0
1987	46.0	1.0	11.0	1.5	3.7	15.1	78.3
1988	46.0	1.0	11.0	1.5	3.7	15.8	79.0
1989	64.6	1.0	11.4	1.6	3.7	17.7	100.0

1/ Farm values are derived from U.S. average prices published monthly by NASS that farmers receive for broilers and market eggs. Broiler prices are multiplied by 1.41 to convert to retail equivalent. The egg price is multiplied by 1.03 to allow for marketing loss. Some historical data have been revised.

Fluid Milk

The retail price for a half-gallon of whole milk sold in stores averaged $1.27 in 1989, up more than 10 cents from a year earlier (table 25). This increase nearly equaled the total price increase from 1980 to 1988. A rise in farm prices of milk, coupled with a large increase in the farm-to-retail price spread, account for the large rise in the retail milk price.

The farm value of a half-gallon of whole milk in 1989 was 59 cents, nearly 5 cents higher than in 1988. Slightly lower production and strong demand for

Table 25--Fluid whole milk: Farm value, marketing costs by function, and retail price per half-gallon

Year	Farm value 1/	Marketing functions: Assembly and procurement 2/	Processing 3/	Wholesaling 3/	Retailing 4/	Retail price 5/
		Cents				
1974	40.9	2.7	10.7	13.6	8.9	76.8
1975	41.2	2.8	11.4	13.6	7.9	76.9
1976	46.2	2.8	10.6	12.1	9.3	81.0
1977	45.1	2.9	13.2	12.6	8.3	82.1
1978	47.0	3.1	14.6	14.3	7.1	86.1
1979	52.2	3.8	15.1	16.6	8.3	96.0
1980	55.8	4.5	15.6	18.9	10.2	104.9
1981	59.5	4.7	16.0	19.1	12.4	111.7
1982	59.2	4.5	16.5	19.3	13.0	112.4
1983	59.5	4.3	16.6	17.8	14.6	112.8
1984	58.2	4.4	17.3	17.3	15.5	112.7
1985	56.1	4.8	18.7	17.9	15.9	113.4
1986	54.8	4.7	19.5	18.4	14.0	111.4
1987	56.1	4.9	19.2	18.1	15.4	113.7
1988	54.2	5.3	19.5	18.4	19.0	116.4
1989	58.9	--	--	--	--	126.9

-- = Not available.

1/ Prices received by farmers are normally quoted for 3.5-percent butterfat at plant of first receipt. This price has been adjusted for transportation from farm to first plant to get the farm price, then adjusted to get the value of milk containing 3.3-percent butterfat, the usual butterfat content at retail. There are approximately 23.2 half-gallons of milk per 100 pounds. 2/ Nonfarm costs of supplying milk to processors, including laboratory and onfarm field service to assure quality, pickup at farms, transportation, receiving and reloading as necessary, and management of raw milk reserves. 3/ Data for processing and wholesaling represent costs for 30 fluid milk processor-distributor firms that represent moderate-sized, single-plant operations throughout the country. Very small plants and plants operated by retail food chains are not included. 4/ May include some wholesaling formerly performed by processors. 5/ Average of Bureau of Labor Statistics monthly prices.

processing into cheese strengthened milk prices. The farm value represented 46 percent of the consumer's milk dollar in 1989, unchanged from the previous year, but 6 percentage points lower than in the early 1980's.

Processing and wholesaling typically are performed by the same firm. The combined processing and wholesaling margin in 1988 was about 38 cents per half-gallon, 33 percent of the retail price, unchanged from the previous 2 years. The retailing margin was 19 cents per half-gallon in 1988, which represented 16 percent of the retail price.

Fruit and Vegetables

Processing and marketing charges for selected fruit and vegetables, such as fresh potatoes, lettuce, oranges, frozen concentrated orange juice, and canned tomatoes, help explain increases in price spreads and, therefore, retail prices over the years (table 26).

Retailing accounts for the largest share of the marketing expense for the fresh produce items (potatoes, oranges, and lettuce). Retailing expenses for oranges averaged 47 percent of the farm-to-retail spread during 1985-89. The retailing share averaged 55 percent for lettuce and 71 percent for potatoes. Produce margins generally exceed the average margin of the typical supermarket, and produce is the most profitable and fastest growing department of the typical store. While gross margins alone do not reflect actual profitability, the percentage of storewide gross profit dollars contributed by fresh produce is much greater than the contribution to store sales would suggest. Produce accounts for 8.7 percent of total sales of the typical supermarket, but produce yields about 20 percent of net profit dollars, according to a survey by the Produce Marketing Association.

Over the past 5 years, packing costs made up the second largest share of the price spread for fresh produce items, averaging 14 percent for lettuce, 15 percent for potatoes, and 21 percent of the farm-to-retail price spread for oranges.

Intercity transportation costs were the third largest share, accounting for 12 percent of the price spread for lettuce and 8 percent for potatoes. For oranges, wholesaling was third largest at 18 percent.

In 1989, there was a substantial increase in the farm value and farm-to-retail spread for potatoes, reflected by a 78-cent-per-pound decrease in the retail price of Northeast, round white potatoes. Most of the rise in the farm-to-retail spread was in retailing charges. Retail prices, farm values, and marketing charges were nearly stable for fresh oranges and lettuce in 1989.

For canned tomatoes, processing charges make up 62 percent of the farm-to-retail price spread. A principal component of the processing spread is packaging: the metal can, the label, and the shipping case. Processing charges were stable during 1985-89. Retail canned tomato prices rose moderately the past 2 years, reflecting increases in the retailing spread.

The retail price of a 12-ounce can of frozen concentrated orange juice increased 3 cents to $1.39 in 1989. The farmer's return increased 4 cents. The processor share dropped 9 cents to 29 cents, but the wholesaling and retailing spread went up about 8 cents. Over the past 5 years, charges for processing made up 37 percent of the farm-to-retail price spread, retailing

Table 26--Selected fruit and vegetables: Farm value, marketing spread by function, and retail price

Food item and year	Farm value 1/	Marketing function: Packing or processing	Intercity transportation 2/	Wholesaling	Retailing	Retail price 3/
	Cents					
Potatoes, Northeast, round white (10-lb. bag):						
1982	4/ 47.7	19.8	10.5	8.1	95.1	5/ 181.3
1983	4/ 55.7	15.5	8.3	6.4	74.4	5/ 160.2
1984	4/ 67.8	18.2	9.7	7.5	87.6	5/ 190.9
1985	4/ 37.0	18.2	9.7	7.5	87.8	5/ 160.3
1986	4/ 50.0	15.7	8.4	6.4	75.3	5/ 155.8
1987	4/ 61.9	26.3	14.0	10.8	126.5	5/ 239.5
1988	4/ 49.5	26.5	14.1	10.9	127.4	5/ 228.4
1989	4/ 76.8	33.9	18.1	14.0	163.1	5/ 305.9
Oranges, California (pound):						
1982	17.1	6/ 4.0	5.2	5.5	15.8	47.6
1983	5.3	6/ 8.6	5.2	5.9	13.7	38.7
1984	17.2	6/ 5.8	5.4	4.9	16.6	49.9
1985	12.4	6/ 9.4	5.4	6.8	19.4	53.4
1986	8.2	6/ 9.9	5.7	6.0	17.8	47.6
1987	10.0	6/ 9.9	6.2	9.0	19.9	55.0
1988	11.8	6/ 8.0	5.4	8.2	23.0	56.4
1989	10.7	6/ 9.1	5.4	9.0	21.9	56.1
Iceberg lettuce, California (pound):						
1982	7/ 8.5	8/ 6.4	5.7	5.2	30.4	56.2
1983	7/ 6.8	8/ 6.4	5.7	5.3	31.2	55.5
1984	7/ 5.1	8/ 6.4	5.7	4.4	28.8	50.4
1985	7/ 8.2	8/ 6.4	5.6	5.1	27.3	52.6
1986	7/ 6.8	8/ 6.8	6.0	6.1	28.2	53.9
1987	7/ 11.1	8/ 6.8	6.4	4.6	30.6	59.5
1988	7/ 10.1	8/ 7.4	5.6	4.3	32.9	60.3
1989	7/ 10.0	8/ 7.3	6.1	2.1	35.1	60.6

See footnotes at end of table.

--Continued

Table 26--Selected fruit and vegetables: Farm value, marketing spread by function, and retail price--Continued

Food item and year	Farm value 1/	Marketing function: Packing or processing	Intercity transportation 2/	Wholesaling	Retailing	Retail price 3/
	Cents					
Orange juice, frozen concentrated (12-oz. can):						
1982	46.3	18.7	3.4	13.6	24.1	106.1
1983	44.0	20.1	3.5	13.3	23.5	104.4
1984	49.0	32.7	3.5	13.2	23.2	121.6
1985	61.9	18.5	3.5	17.2	30.5	131.6
1986 9/	39.6	23.2	3.8	17.6	31.4	115.6
1987 9/	42.5	32.2	3.9	13.0	23.2	114.8
1988 9/	51.9	38.1	3.9	15.4	27.4	136.7
1989 10/	56.1	29.0	4.0	18.1	32.2	139.4
Tomatoes, California (303 can):						
1982	4.9	37.2	5.0	1.5	6.4	55.0
1983	5.1	30.5	5.1	2.3	9.6	52.6
1984	4.9	29.6	5.2	2.4	10.4	52.5
1985	4.9	29.3	5.3	2.3	9.7	51.5
1986	4.8	27.7	5.3	2.6	11.0	51.4
1987	4.6	30.0	5.4	2.0	8.7	50.7
1988 9/	4.4	31.1	5.4	2.4	10.3	53.6
1989 10/	4.5	31.7	5.6	2.8	12.9	57.5

1/ Payment for the quantity of farm product equivalent to the retail unit minus imputed value of byproducts, computed from average grower prices. 2/ Costs are for truck shipment. 3/ U.S. average retail prices except as noted. Prices of fresh produce weighted by quantities marketed. 4/ Prices include some packing costs, since many growers may grade, wash, and bag potatoes. 5/ Selected eastern markets. 6/ Includes picking costs. 7/ Value in the field. 8/ Contract price for cutting, packing, hauling, cooling, and selling. 9/ Revised. 10/ Preliminary.

equaled 37 percent of the price spread, wholesaling charges were about 21 percent, and transportation costs were about 5 percent. Packaging represents a major cost of processing. Automated operations minimize the labor cost of concentrated orange juice processing.

Bread

The average retail price of white pan bread in 1989 was 66.4 cents per pound, 5.1 cents higher than in 1988 (table 27). This price is the average of monthly prices reported by the U.S. Bureau of Labor Statistics.

The farm value of wheat, at 4.8 cents, was 0.7 cent higher in 1989 than in 1988. The farm value represents the payment to farmers for the quantity of

Table 27--White bread: Retail price, farm value of ingredients, farm-to-retail price spread, and farm value share of retail price per 1-pound loaf

Year	Retail price	Farm value			Farm-to-retail price spread	Farm value share	
		Wheat 1/	Other farm ingredients 2/	All ingredients		Wheat	All ingredients
	Cents					Percent	
1970	27.7	2.6	0.8	3.4	24.3	9	12
1971	28.5	2.6	.9	3.5	25.0	9	12
1972	28.2	2.9	.9	3.8	24.4	10	13
1973	31.5	4.1	1.4	5.5	26.0	13	17
1974	39.3	5.4	2.5	7.9	31.4	14	20
1975	41.0	4.5	2.3	6.8	34.2	11	17
1976	40.2	3.8	1.7	5.5	34.7	9	14
1977	40.5	2.7	.7	3.4	37.1	7	8
1978	41.7	3.3	.7	4.0	37.7	8	10
1979	46.7	4.1	.8	4.9	41.8	9	10
1980	50.9	4.5	.8	5.3	45.6	9	10
1981	52.5	4.7	.8	5.5	47.0	9	10
1982	53.2	4.4	.6	5.0	48.2	8	9
1983	54.2	4.5	.7	5.2	49.0	8	9
1984	54.1	4.3	.8	5.1	49.0	8	9
1985	55.3	4.1	.7	4.8	50.5	7	9
1986	56.5	3.5	.5	4.1	52.5	6	7
1987	54.7	3.3	.5	3.8	50.9	6	7
1988	61.3	4.1	.7	4.8	56.5	7	8
1989	66.4	4.8	.7	5.5	60.9	7	8

1/ Payment to farmers for the quantity of wheat (approximately 0.86 pound) required to produce the flour for a 1-pound loaf of white bread, minus the value of millfeed byproducts. Based on average farm prices for hard winter and spring wheat in 11 States producing these wheats through 1982; all wheat prices used beginning in 1983. 2/ Value for lard, shortening, granulated sugar, and nonfat dry milk through 1976. Value for 1977 forward is for lard, soybean oil, high-fructose corn syrup, corn syrup, and soy-whey blend.

wheat (approximately 0.86 pound) required to produce the flour for a 1-pound loaf of bread. The payment is computed from the average farm price for all wheat. A deduction is made for the value of millfeed, a byproduct of milling the wheat. The value of the millfeed ranges from 15 percent to 20 percent of the value of the wheat, depending on the flour-milling extraction rate, the price of flour, and the price of millfeed.

Other farm-derived ingredients, including lard, soybean oil, high-fructose corn syrup, and soy-whey blend, contributed 0.7 cent to a total farm value of 5.5 cents. Farm value of ingredients was 8 percent of the retail price spread in 1989, unchanged from that for 1988. Thus, the farm-to-retail spread--consisting of wheatmilling, breadbaking, and distribution costs--was nearly all of the retail bread price.

Sugar

Because of the stability provided by the price-support program for sugar, retail sugar prices, together with the farm value and price spreads, changed very little during most of the 1980's. However, in crop year 1988/89, the domestic raw sugar price increased about 0.4 cent per pound and the refined sugar price rose about 4.5 cents per pound. These increases resulted in higher farm values. The processing and refining price spread also widened because of tight supplies of refined beet and cane sugar caused in part by the drought-reduced 1988 crop.

The 1988/89 farm value of a pound of sugar was 14.6 cents, about 4 percent higher than a year earlier (table 28). The farm value is based on the season average prices received by growers in the United States for sugarcane and sugar beets. The farm value accounted for 39 percent of the retail price of sugar, down about 2 percentage points from the previous year.

Table 28--Sugar: Farm value, price spreads, and retail price

Item	Crop year beginning October					
	1983/84	1984/85	1985/86	1986/87	1987/88	1988/89
	Cents per pound					
Farm value 1/	14.3	13.4	13.3	13.6	14.0	14.6
Processing and refining spread 2/	16.8	15.9	14.6	14.4	14.1	16.9
Wholesaling and retailing spread 3/	4.2	5.5	6.1	5.6	6.0	5.9
Retail price 4/	35.3	34.8	34.0	33.6	34.1	37.4

1/ Based on season average prices received by continental U.S. sugar producers of sugarcane in Louisiana and Florida and for all sugar beets. 2/ Difference between the farm value and an average of effective wholesale prices. 3/ Difference between the retail price and the wholesale price. 4/ Average of Bureau of Labor Statistics' monthly retail prices for sugar sold in 33-80-ounce packages.

☆ U.S. Government Printing Office : 1990 - 261-487/20117